FOR USE ON A PARCEL WITH A SINGLE DWELLING

* CURB OR COMBINED CURB AND GUTTER SHALL BE TAKEN OUT AND REPLACED WITH CONCRETE, SEPARATED FROM THE DRIVE BY 1/2" PREMOLDED EXPANSION JOINT. WHEN LESS THAN 5 FT. OF A CURB SECTION REMAINS AFTER THE CURB CUT IS LOCATED, IT SHALL ALSO BE REMOVED AND REPLACED. CURB SHALL BE CONSTRUCTED IN MINIMUM 5 FT. SECTIONS AND MAXIMUM 10 FT. SECTIONS.

** SIDEWALK WIDTH SHALL BE PER STANDARD DRAWING 2300. SIDEWALK THICKNESS SHALL BE 6" CONCRETE TO ONE FULL PANEL (MIN. 5 FT.) BEYOND THE EDGE OF THE FULL WIDTH SECTION OF THE DRIVE.

*** 5 FT. ON ROADWAYS WITH 35 MPH SPEED LIMIT, 2 FT. FOR SPEED LIMITS LESS THAN 35 MPH.

PAR = PEDESTRIAN ACCESS ROUTE. SET PAR THROUGH APPROACH AT SIDEWALK GRADE TO AVOID RAMP OR TRANSITION. IF NOT POSSIBLE, THEN MINIMIZE TRANSITION FROM SIDEWALK TO APPROACH.

WHEN A CURB OR CURB AND GUTTER ARE PRESENT ALL DRIVEWAYS SHALL BE ITEM 452 CONCRETE PAVEMENT

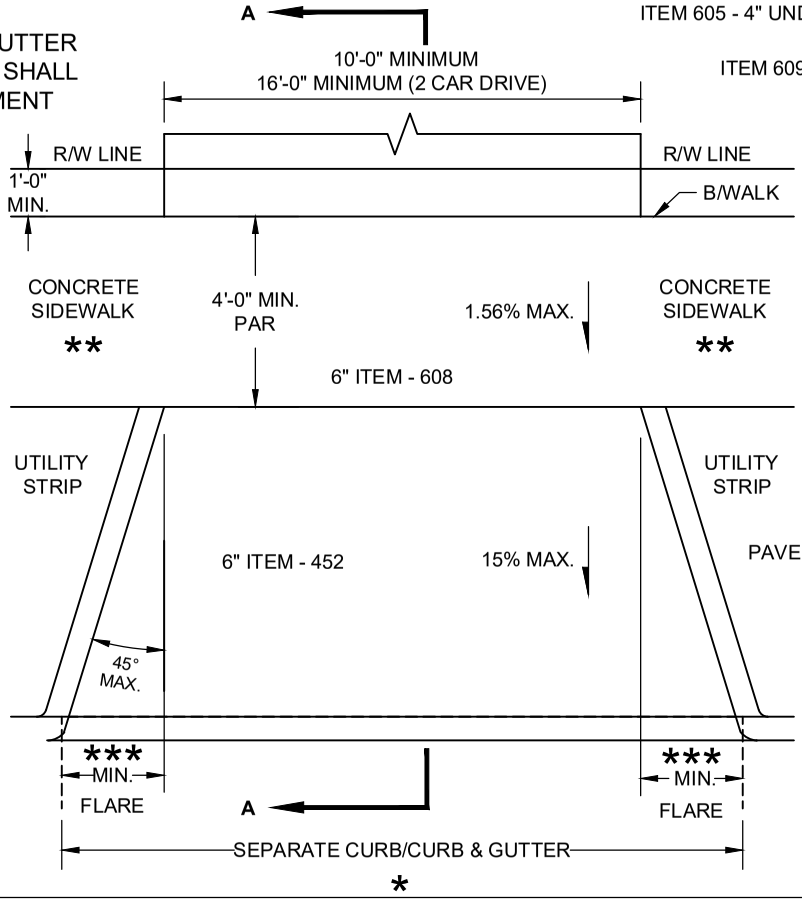

CURBED ROADWAY, WITH UTILITY STRIP, RIGID

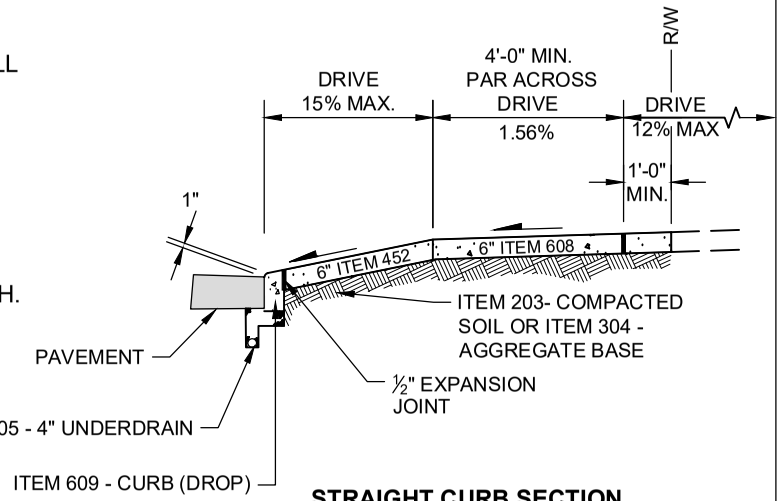

STRAIGHT CURB SECTION
SECTION A-A

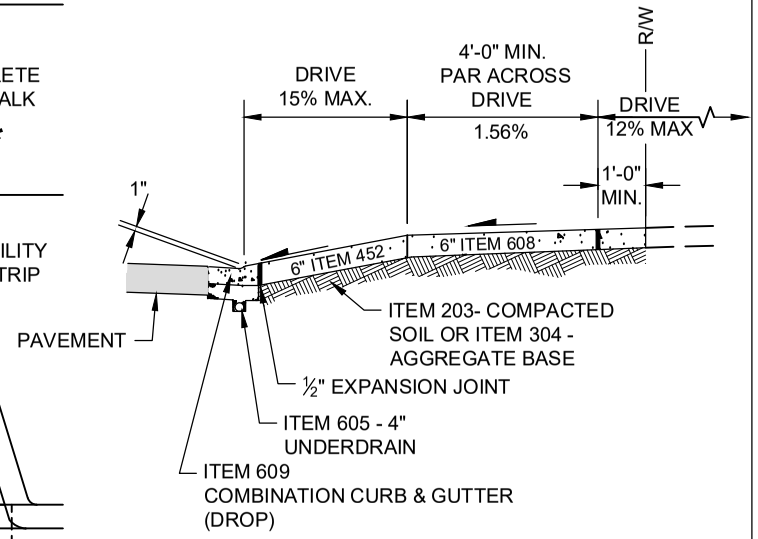

COMBINATION CURB AND GUTTER SECTION
SECTION A-A

DRIVEWAY, RESIDENTIAL

CITY OF COLUMBUS, OHIO
DEPARTMENT OF PUBLIC SERVICE
DIVISION OF DESIGN AND CONSTRUCTION

CITY ENGINEER

STD DWG
2201

12/31/18

SHT 1 OF 6

* THE FIRST FULL PANEL AT THE EDGE OF THE FULL WIDTH SECTION OF THE DRIVE INCLUDING THE DRIVE FLARE SHALL BE 6" ITEM 608

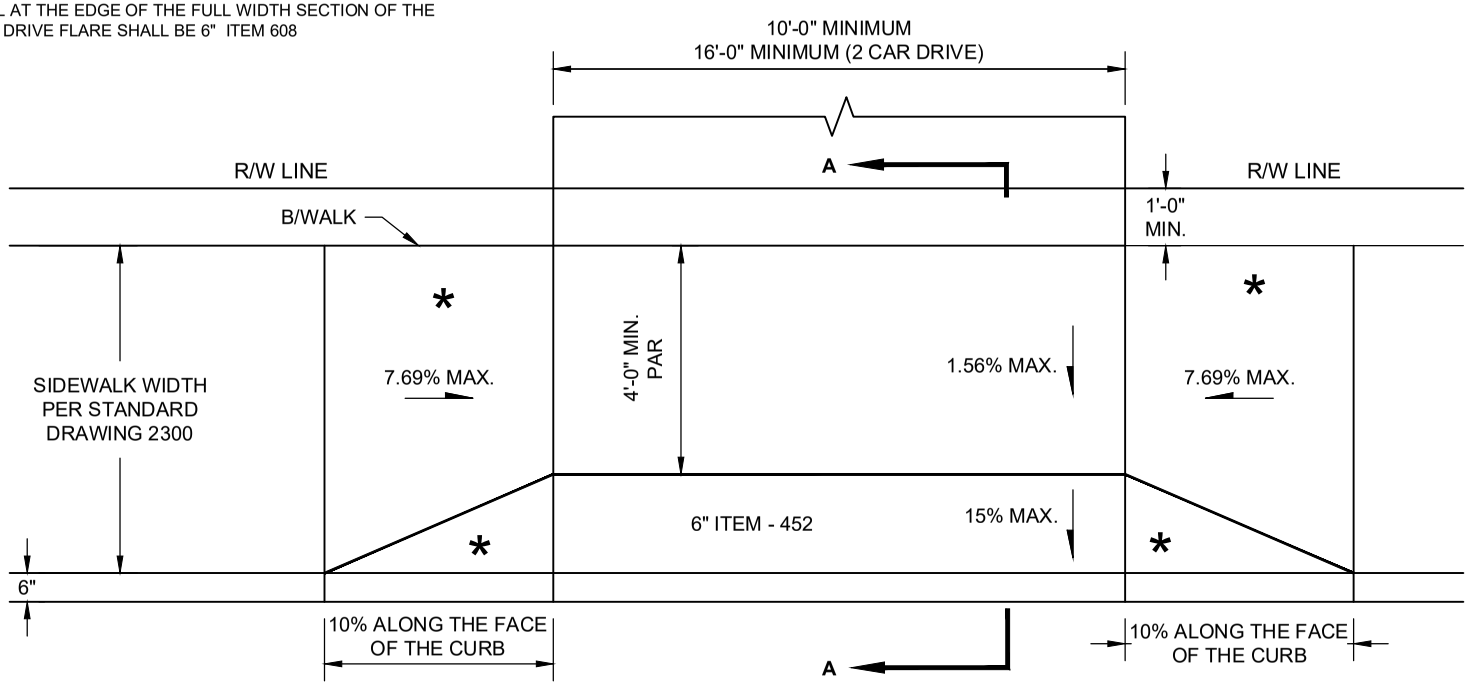

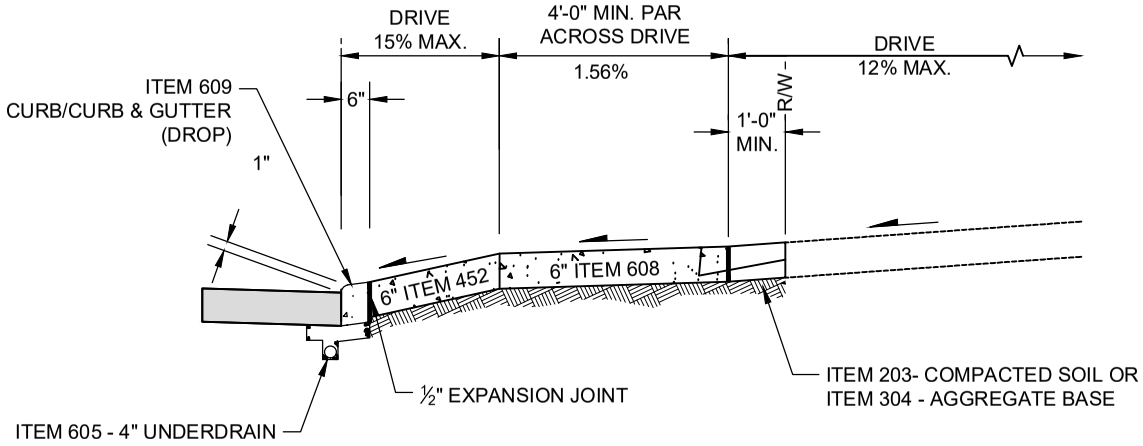

SECTION A-A

SEE SHEET 1 OF 6 FOR NOTES

CURBED ROADWAY, TYPE A, RIGID

DRIVEWAY, RESIDENTIAL

CITY OF COLUMBUS, OHIO
DEPARTMENT OF PUBLIC SERVICE
DIVISION OF DESIGN AND CONSTRUCTION

STD DWG
2201
12/03/18
SHT 2 OF 6

* USE WHEN FRONT RAMP OF DRIVE IS LONGER THAN 2 FT. MAINTAIN R/W CLEARANCE FOR WALK.

** THE FIRST FULL PANEL AT THE EDGE OF THE FULL WIDTH SECTION OF THE DRIVE INCLUDING THE DRIVE FLARE SHALL BE 6" ITEM 608

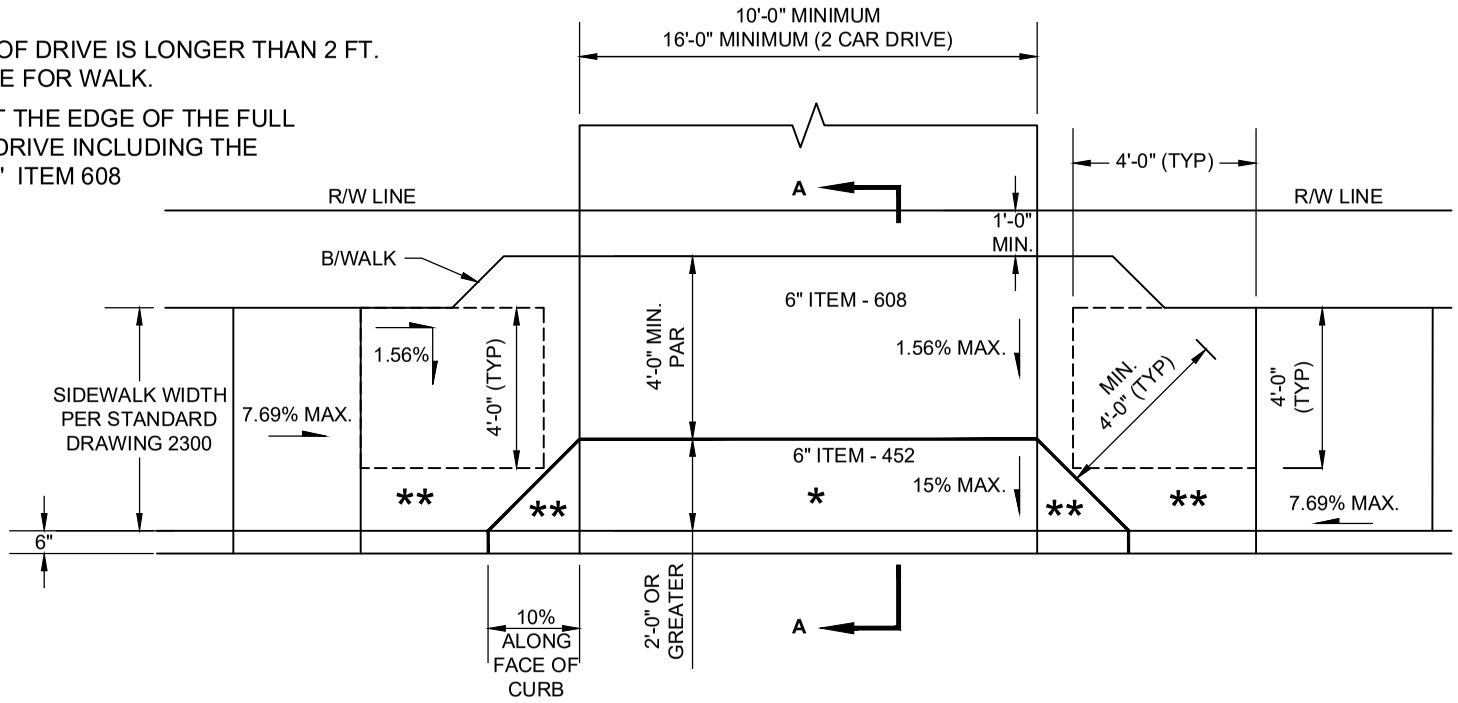

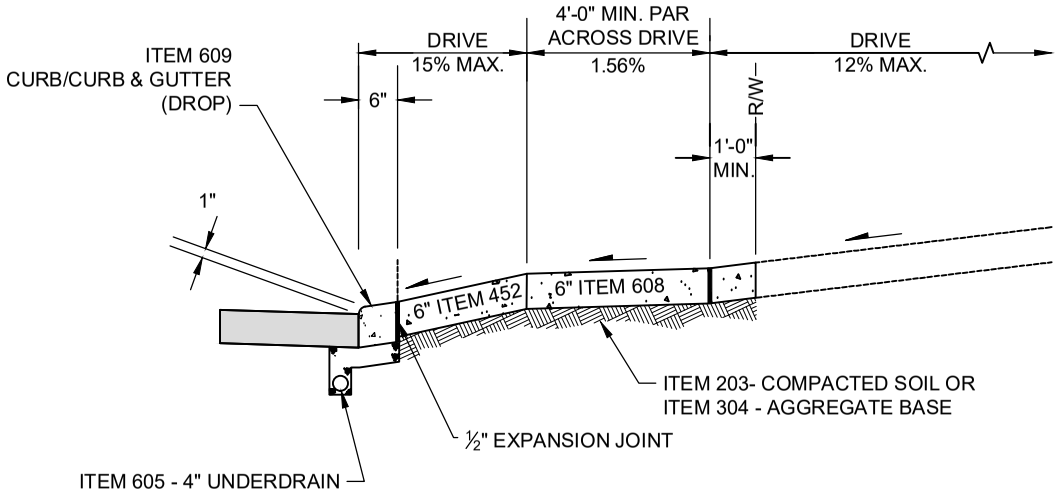

SECTION A-A

SEE SHEET 1 OF 6 FOR NOTES

CURBED ROADWAY, TYPE B, RIGID

DRIVEWAY, RESIDENTIAL

CITY OF COLUMBUS, OHIO
DEPARTMENT OF PUBLIC SERVICE
DIVISION OF DESIGN AND CONSTRUCTION

STD DWG
2201
12/31/18

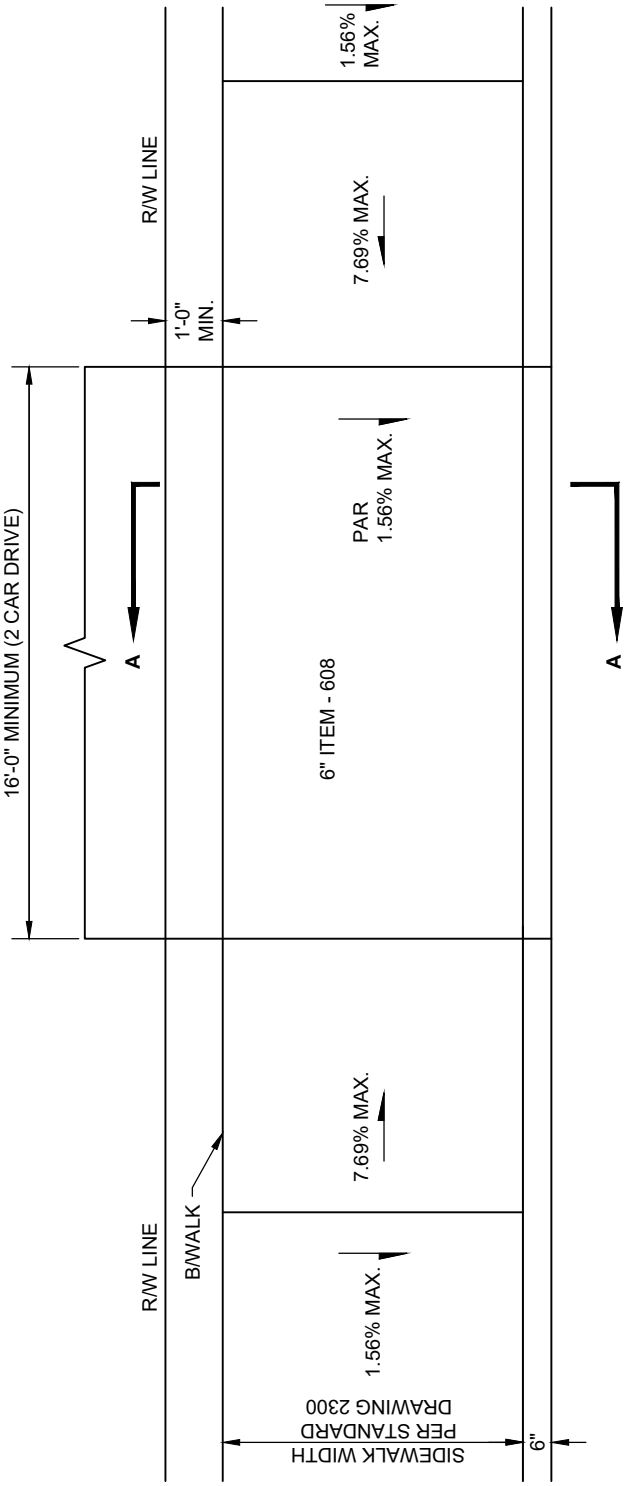

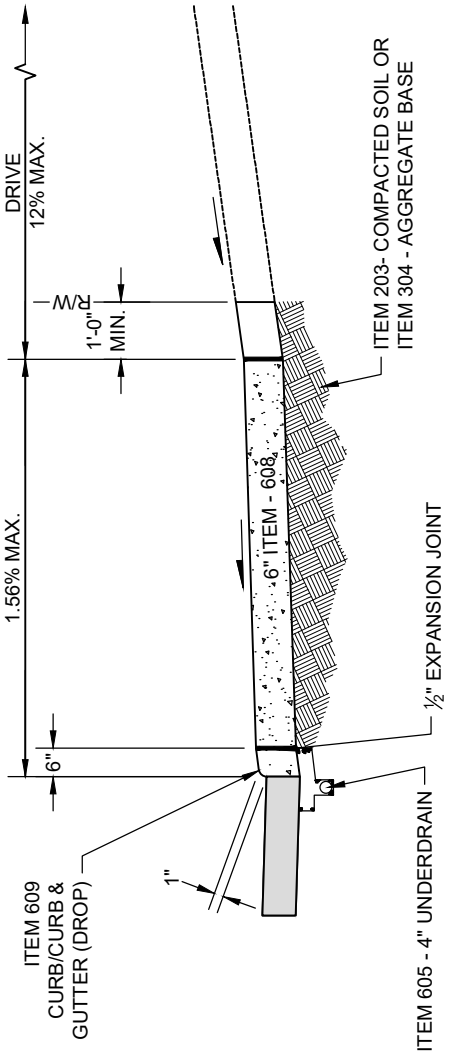

SECTION A-A
SEE SHEET 1 OF 6 FOR NOTES

CURBED ROADWAY, TYPE C, RIGID

DRIVEWAY, RESIDENTIAL

CITY OF COLUMBUS, OHIO
DEPARTMENT OF PUBLIC SERVICE
DIVISION OF DESIGN AND CONSTRUCTION

STD DWG
2201
12/31/18
SHT 4 OF 6

FOR USE ON A PARCEL WITH A SINGLE DWELLING

* REPLACEMENT OF EXISTING DRIVES SHALL MATCH PAVEMENT (TYPE, DESIGN) IN KIND TO EXISTING DRIVE. NEW DRIVES SHALL BE PAVEMENT (TYPE, DESIGN) SIMILAR TO MAIN ROADWAY (TYPE, DESIGN).

DRIVE PAVEMENT (TYPE, FLEXIBLE)

ITEM 441 - 1.5" ASPHALT CONCRETE, SURFACE COURSE, (TYPE 1), PG 64-22

ITEM 441 - 2.5" ASPHALT CONCRETE, INTERMEDIATE COURSE, (TYPE 2),448

ITEM 304 - 4" AGGREGATE BASE

** SIDEWALK SHALL BE PER STANDARD DRAWING 2300. SIDEWALK THICKNESS SHALL BE 6" CONCRETE TO ONE FULL PANEL (MIN. 5 FT.) BEYOND THE EDGE OF THE FULL WIDTH SECTION OF THE DRIVE.

PAR = PEDESTRIAN ACCESS ROUTE. SET PAR THROUGH APPROACH AT SIDEWALK GRADE TO AVOID RAMP OR TRANSITION. IF NOT POSSIBLE, THEN MINIMIZE TRANSITION FROM SIDEWALK TO APPROACH.

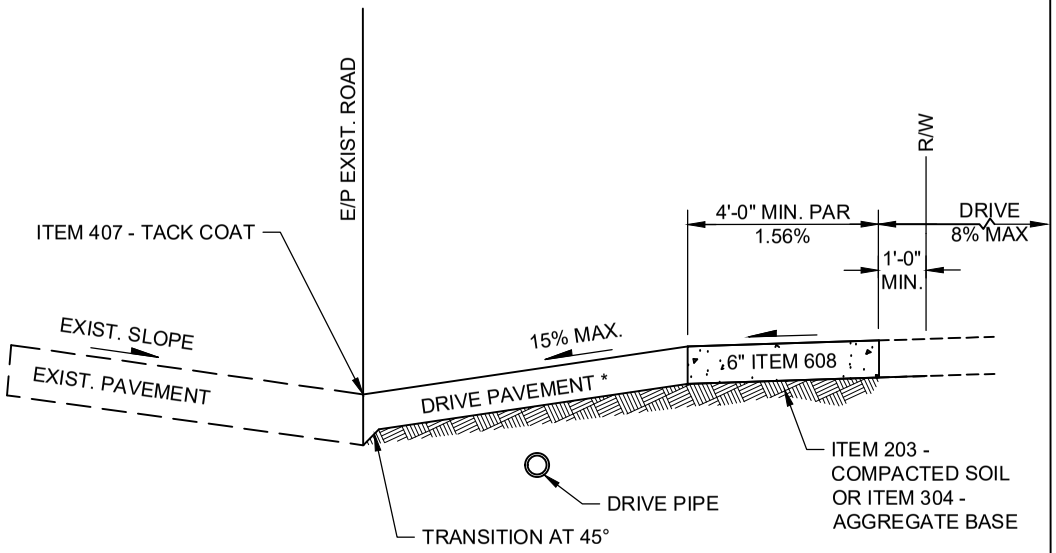

SECTION A-A

WHEN CONDITIONS EXIST USE THE FOLLOWING;
IF THE DISTANCE FROM THE SIDEWALK TO THE EDGE OF PAVEMENT IS:

>5' ----- HOLD THE FLARE TO 45* AND ADJUST THE WIDTH ACCORDINGLY, MAINTAIN THE MINIMUM 2' WIDE PERPENDICULAR AREA OF THE APPROACH

5'-7' --- MAINTAIN THE 5' MAXIMUM FLARE WIDTH, VARY THE ANGLE, AND MAINTAIN THE MINIMUM 2' WIDE PERPENDICULAR AREA OF THE APPROACH

>7' ----- DECREASE THE 45* ANGLE (ADJUST ACCORDINGLY), MAINTAIN THE MINIMUM 2' WIDE PERPENDICULAR AREA OF THE APPROACH

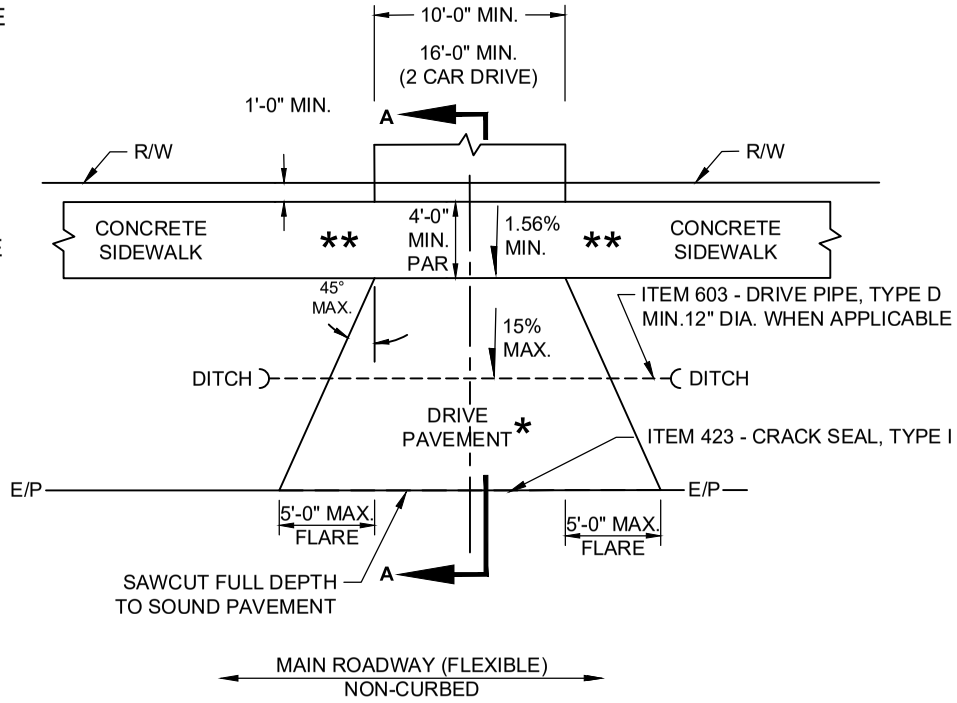

DRIVEWAY, RESIDENTIAL

NON-CURBED ROADWAY,
DRIVE PAVEMENT FLEXIBLE

CITY OF COLUMBUS, OHIO
DEPARTMENT OF PUBLIC SERVICE
DIVISION OF DESIGN AND CONSTRUCTION

STD DWG
2201

12/31/18

SHT 5 OF 6

FOR USE ON A PARCEL WITH A SINGLE DWELLING

* DRIVE PAVEMENT (TYPE, RIGID)
ITEM 452 - 6" NON-REINFORCED PORTLAND CEMENT CONCRETE

** SIDEWALK SHALL BE PER STANDARD DRAWING 2300. SIDEWALK THICKNESS SHALL BE 6" CONCRETE TO ONE FULL PANEL (MIN. 5 FT.) BEYOND THE EDGE OF THE FULL WIDTH SECTION OF THE DRIVE.

PAR = PEDESTRIAN ACCESS ROUTE. SET PAR THROUGH APPROACH AT SIDEWALK GRADE TO AVOID RAMP OR TRANSITION. IF NOT POSSIBLE, THEN MINIMIZE TRANSITION FROM SIDEWALK TO APPROACH.

WHEN CONDITIONS EXIST USE THE FOLLOWING;
IF THE DISTANCE FROM THE SIDEWALK TO THE EDGE OF PAVEMENT IS:

>5' ----- HOLD THE FLARE TO 45* AND ADJUST THE WIDTH ACCORDINGLY, MAINTAIN THE MINIMUM 2' WIDE PERPENDICULAR AREA OF THE APPROACH
5'-7' ---- MAINTAIN THE 5' MAXIMUM FLARE WIDTH, VARY THE ANGLE, AND MAINTAIN THE MINIMUM 2' WIDE PERPENDICULAR AREA OF THE APPROACH
>7' ----- DECREASE THE 45* ANGLE (ADJUST ACCORDINGLY), MAINTAIN THE MINIMUM 2' WIDE PERPENDICULAR AREA OF THE APPROACH

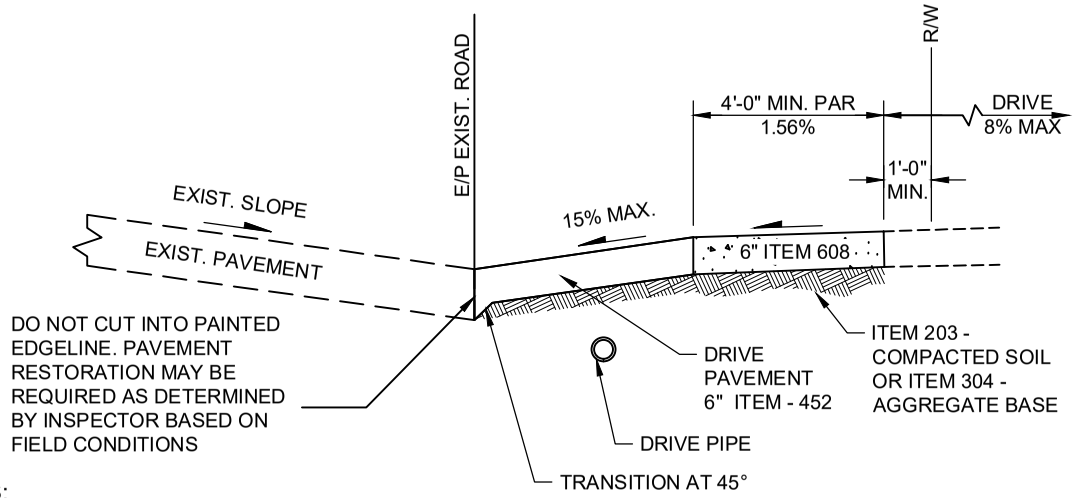

SECTION A-A

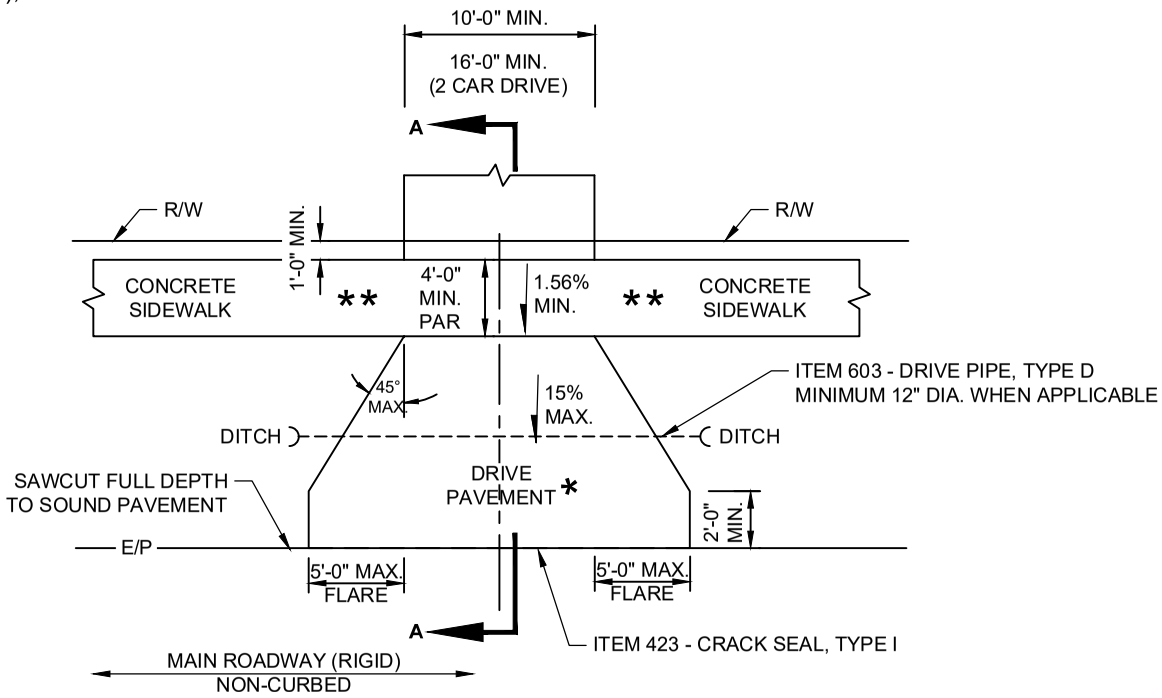

NON-CURBED ROADWAY
DRIVE PAVEMENT, RIGID

DRIVEWAY, RESIDENTIAL

CITY OF COLUMBUS, OHIO
DEPARTMENT OF PUBLIC SERVICE
DIVISION OF DESIGN AND CONSTRUCTION

STD DWG
2201
12/31/18
SHT 6 OF 6