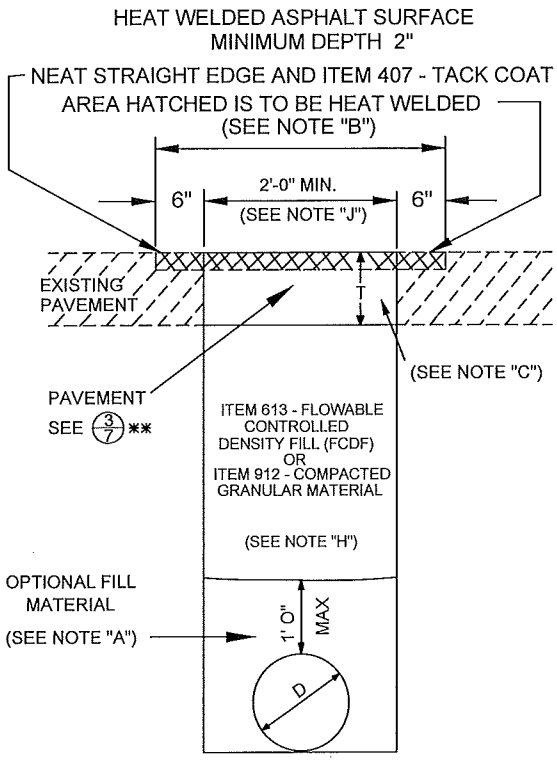

TYPE I

STANDARD FLEXIBLE ASPHALT REPAIR WITH HEATWELD SURFACE (SEE NOTE "B")

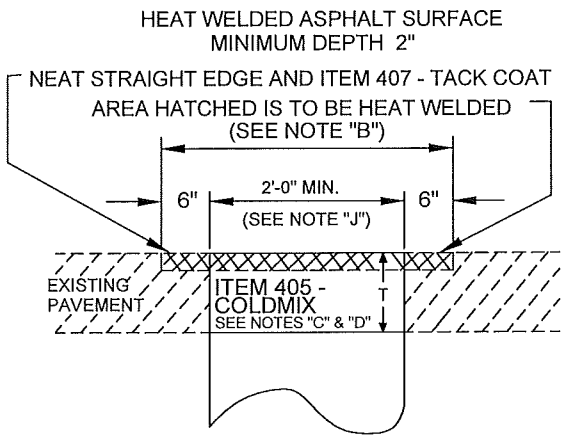

TYPE II

WINTER OPERATIONS FLEXIBLE ASPHALT REPAIR WITH HEATWELD SURFACE (SEE NOTE "E")

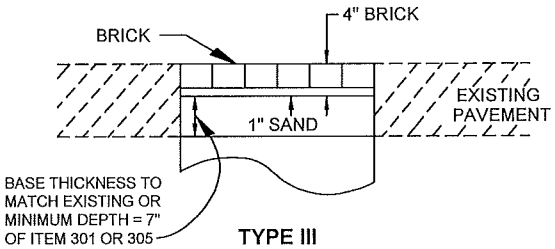

TYPE III

BRICK STREET REPAIR (SEE NOTE "F")

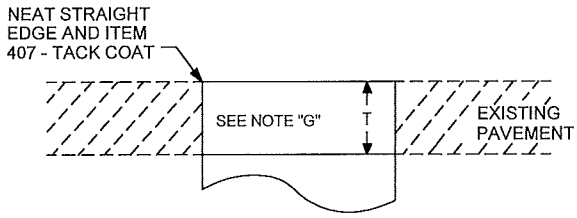

TYPE IV

ALLEY REPAIR

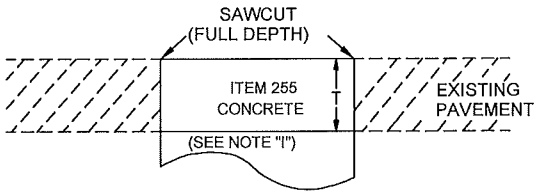

TYPE V

CONCRETE STREET REPAIR OR CONCRETE BUS PAD

BACKFILL FOR ALL TYPES SHALL MEET THE REQUIREMENTS SHOWN IN TYPE I ABOVE.

T: MATCH EXISTING PAVEMENT THICKNESS, HOWEVER, MINIMUM OF 10" ON ALL STREET CUTS AND 6" ON ALL ALLEYS.

PAVEMENT & UTILITY CUT REPAIR STANDARDS

CITY OF COLUMBUS, OHIO
DEPARTMENT OF PUBLIC SERVICE
DIVISION OF DESIGN AND CONSTRUCTION

STD DWG
1441

12/1/13

CITY ENGINEER

SHT 1 OF 7

SIDEWALK AND CURB REPAIR DETAILS

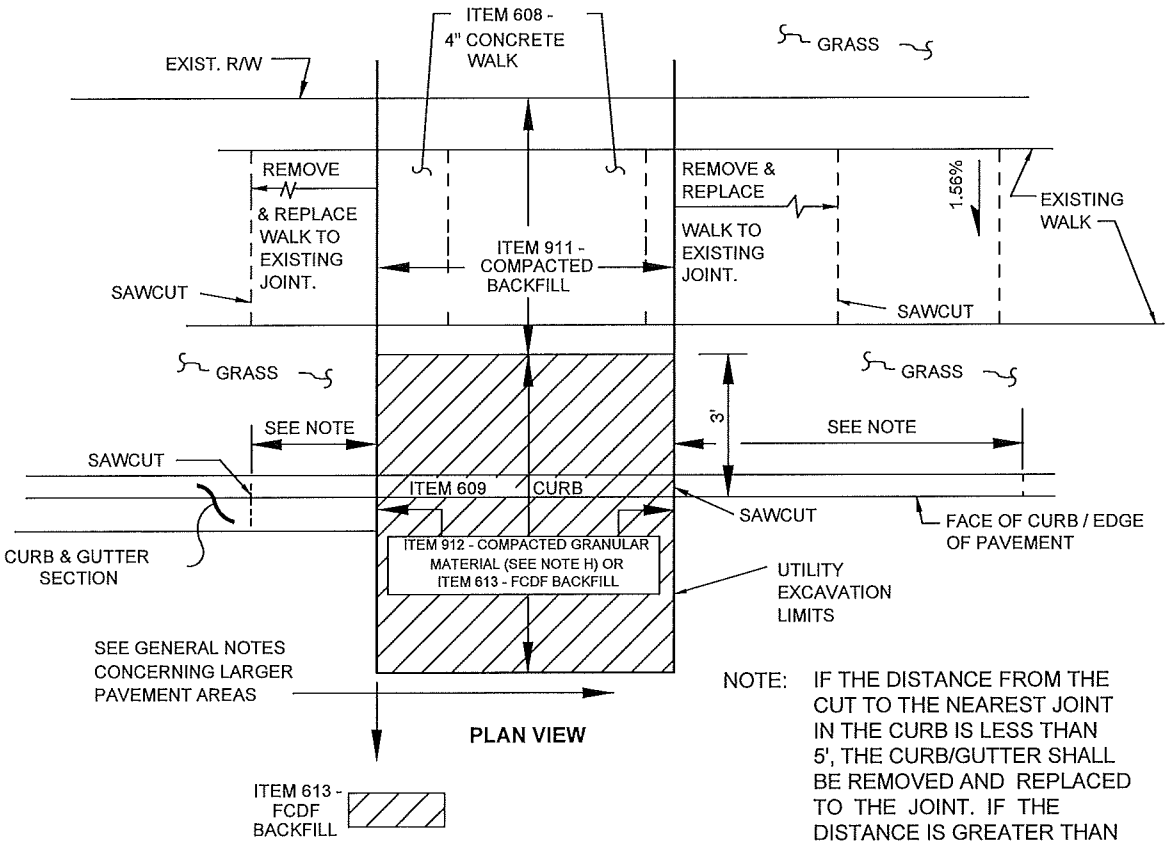

NOTE: IF THE DISTANCE FROM THE CUT TO THE NEAREST JOINT IN THE CURB IS LESS THAN 5', THE CURB/GUTTER SHALL BE REMOVED AND REPLACED TO THE JOINT. IF THE DISTANCE IS GREATER THAN 5', THE CURB MAY REMAIN.

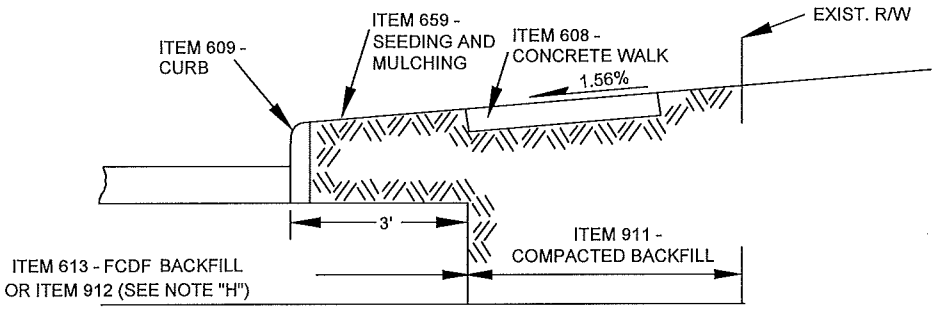

BOTTOM OF EXCAVATION

ALL GRASS AREAS SHALL BE SEEDED IN ACCORDANCE WITH ITEM 659 - SEEDING AND MULCHING.

PAVEMENT & UTILITY CUT REPAIR STANDARDS

CITY OF COLUMBUS, OHIO
DEPARTMENT OF PUBLIC SERVICE
DIVISION OF DESIGN AND CONSTRUCTION

STD DWG
1441
12/1/13
SHT 2 OF 7

GENERAL NOTES

EXCAVATION PERMIT REQUIRED: A CITY OF COLUMBUS STREET EXCAVATION PERMIT IS REQUIRED FOR ALL EXCAVATIONS WITHIN THE PUBLIC RIGHT-OF-WAY, AS SET FORTH BY COLUMBUS CITY CODE, CHAPTER 903 AND ISSUED IN ACCORDANCE WITH PROVISIONS IN THE GENERAL RULES AND REGULATIONS OF THE DEPARTMENT OF PUBLIC SERVICE.

SCOPE OF WORK

THIS WORK SHALL CONSIST OF PAVEMENT REMOVAL, NECESSARY EXCAVATION, AND PAVEMENT REPLACEMENT IN ACCORDANCE WITH THE DETAILS SHOWN HEREIN. ALL WORK AND MATERIALS SHALL CONFORM TO THE REQUIREMENTS OF THE CURRENT CITY OF COLUMBUS CONSTRUCTION AND MATERIALS SPECIFICATION (CMSC).

PROCEDURES USED FOR THE PAVEMENT REMOVAL AND REPLACEMENT SHALL NOT CAUSE SPALLING OR CRACKING OF ADJACENT PAVEMENT.

WHEN THE PAVEMENT IS REMOVED AND THE CONTRACTOR IS UNABLE TO COMPLETE THE REQUIRED REPLACEMENT IN TIME FOR IT TO BE OPENED TO TRAFFIC AS INDICATED ON THE PERMIT, THE EXCAVATION SHALL BE FILLED WITH A BITUMINOUS PATCH MATERIAL WITH A DURABLE SURFACE OR PROPERLY PLATED. (AS PER CITY CODE CHAPTER 903 &/OR SHEET 7 OF THIS STANDARD DRAWING) THE CONTRACTOR WILL BE REQUIRED TO MAINTAIN THESE PATCHES WHILE THEY ARE IN SERVICE. THE COST OF PLACING, MAINTAINING, AND REMOVING AND DISPOSING OF THE TEMPORARY PATCHES OR PLATES WILL BE AT THE CONTRACTOR'S EXPENSE.

WHEN ITEM 613 FCDF IS USED AS A BACKFILL, NO PAVEMENT SHALL BE PLACED UNTIL BLEED WATER HAS BEEN EVAPORATED FROM THE FCDF SURFACE OR HAS BEEN DRAINED OR REMOVED FROM THE SURFACE. ITEM 613 FCDF IS NOT PERMITTED AS A TEMPORARY DRIVING SURFACE.

THE BACKFILLING PAVEMENT REPAIR AND/OR HEAT WELDING SHALL BE DONE BY THE CONTRACTOR OR PERMITEE IN ACCORDANCE WITH CITY SPECIFICATIONS. IF DESIRED, ANY OR ALL OF THIS WORK CAN BE PERFORMED BY THE CITY OF COLUMBUS. THE CITY SHALL COLLECT APPROPRIATE FEES AT THE TIME THE PERMIT IS ISSUED FOR SAID WORK.

RESTORATION OF ANY SIDEWALK, CURB, STREET PAVEMENT, ETC., SHALL OCCUR NO LATER THAN 30 DAYS AFTER CONCLUSION OF ANY UTILITY REPAIR OR INSTALLATION ACTIVITY. CONSTRUCTION ACTIVITY COMPLETED DECEMBER THROUGH APRIL SHALL BE RESOLVED NO LATER THAN MAY 31ST. ADDITIONAL PERMITS SHALL NOT BE ISSUED UNTIL THE VIOLATIONS ARE CORRECTED TO THE SATISFACTION OF THE DEPARTMENT OF PUBLIC SERVICE. IN ADDITION, EACH VIOLATION MAY BE DEALT WITH IN ACCORDANCE WITH SECTION 903.99 OF THE COLUMBUS CITY CODE.

** PAVING STANDARDS FOR LARGE TRENCHES OR PAVING AREAS

THE PAVEMENT REPAIR SECTION SHALL CONFORM TO 3 INCHES OF ITEM 448 ASPHALT CONCRETE ON EITHER 7 INCHES OF ITEM 301 ASPHALT CONCRETE BASE OR ITEM 305 PORTLAND CEMENT CONCRETE BASE.

PAVEMENT & UTILITY CUT REPAIR STANDARDS

CITY OF COLUMBUS, OHIO
DEPARTMENT OF PUBLIC SERVICE
DIVISION OF DESIGN AND CONSTRUCTION

STD DWG
1441
12/1/13
SHT 3 OF 7

WHEN A TRENCH EXCEEDS 100 FT IN LENGTH, THE REPAIR SHALL INCLUDE PLANING A FULL LANE WIDTH (OR ANY OTHER LANE WIDTH AS DIRECTED BY THE DEPARTMENT OF PUBLIC SERVICE) TO A DEPTH OF 1 ½ INCHES FOR THE ENTIRE LENGTH OF THE TRENCH. THE PLANED AREA SHALL THEN BE REPAVED WITH A PAVER IN ACCORDANCE WITH CURRENT CITY STANDARD SPECIFICATIONS. ITEM 423 - CRACK SEALING, TYPE 1 SHALL BE APPLIED TO EXPOSED JOINTS ONCE THE PAVING OPERATION HAS BEEN COMPLETED.

WHEN TRENCHING WORK CROSSES LANES, ALL AFFECTED LANES SHALL REQUIRE PLANING AND RESURFACING AS DESCRIBED ABOVE. THIS WORK SHALL INCLUDE ALL OF THE AFFECTED PAVEMENT AREA.

SPECIAL NOTES

NOTE 'A' : WHEN USING FLOWABLE CONTROLLED DENSITY FILL (FCDF), THE OPTIONAL FILL AREA OVER THE CONDUIT MAY BE BACKFILLED WITH SAND, GRANULAR MATERIAL, OR OTHER SUITABLE 912 MATERIAL, FOR A DISTANCE NOT TO EXCEED 1 FT. A PROTECTIVE BARRIER OF VISQUEEN OR SIMILAR MATERIAL IS PERMITTED.

NOTE 'B' : FOR TYPE I AND TYPE II CUT REPAIRS, THE AREA TO BE HEAT WELDED IS TO INCLUDE THE CUT AND EXTEND FOR 6 INCHES BEYOND EACH SIDE OF THE CUT FOR A NOMINAL DEPTH OF 2 INCHES.

NOTE 'C' : FOR TYPE I AND TYPE II PAVEMENT REPAIR, THE ITEM 448 HOT ASPHALT CONCRETE OR ITEM 405 COLD MIX SHALL BE PLACED IN LIFTS NOT EXCEEDING 3 INCHES AND COMPACTED WITH A COMBINATION VIBRATORY PLATE COMPACTOR, OR A VIBRATORY STEEL WHEELED ROLLER WITH A MINIMUM CERTIFIED FORCE OF 2000 POUNDS. IN ALL CASES THE SURFACE LIFT SHALL BE COMPACTED WITH THE VIBRATORY STEEL WHEELED ROLLER. WHEN PLACING ITEM 405 COLD MIX FULL DEPTH, MATERIAL TEMPERATURE SHALL BE 70 DEGREES OR ABOVE.

NOTE 'D' : COLD MIX SHALL BE ITEM 405 COLD MIX OR OTHER COLD MIX APPROVED BY THE CITY OF COLUMBUS. IN LIEU OF COLD MIX, THE CONTRACTOR MAY STOCKPILE ITEM 448 ASPHALT CONCRETE AND REHEAT IT TO PLACE IN CUT AS PAVEMENT REPAIR. TYPE II PAVEMENT REPLACEMENT SHALL CONSIST OF FULL DEPTH ITEM 405 COLD MIX FOR SMALL EXCAVATIONS. LARGE EXCAVATIONS SHALL REQUIRE A MINIMUM OF 7 INCHES OF FAST SETTING PORTLAND CEMENT AND 2 INCHES OF ITEM 405 COLD MIX.

NOTE 'E' : THE COLD MIX IS TO BE REPLACED WITH ITEM 448 ASPHALT CONCRETE WHICH IS TO BE HEAT WELDED AS SET FORTH IN NOTE 'B'. THIS WORK SHALL BE PERFORMED AS SOON AS ASPHALT IS AVAILABLE.

PAVEMENT & UTILITY CUT REPAIR STANDARDS

CITY OF COLUMBUS, OHIO
DEPARTMENT OF PUBLIC SERVICE
DIVISION OF DESIGN AND CONSTRUCTION

STD DWG
1441
12/1/13
SHT 4 OF 7

NOTE 'F' : REPAIR OF BRICK STREETS

1. BRICKS REMOVED FROM A REPAIR AREA SHALL BE STORED IN A SAFE PLACE BY THE CONTRACTOR FOR REUSE. THE CONTRACTOR WILL BE RESPONSIBLE FOR REPLACING ANY BRICKS THAT ARE STOLEN OR DAMAGED, AT NO ADDITIONAL COST TO THE CITY.

2. IF BRICKS ARE SUPPLIED BY THE CONTRACTOR, THEY MUST FIRST BE APPROVED BY THE CITY BEFORE THEY ARE USED.

3. SAW CUTTING: ALL PARTIAL BRICKS SHALL BE SAWCUT. FURTHER, NO BRICK WILL BE PERMITTED TO BE CUT, FOR REPLACEMENT, TO A LENGTH LESS THAN $\frac{1}{2}$ ITS ORIGINAL LENGTH. THIS MAY REQUIRE SAW CUTTING OF ADJACENT UNDISTURBED BRICK(S).

4. THE EXISTING BASE MATERIAL SHALL BE CUT BACK TO AS NEARLY VERTICAL AS POSSIBLE. IF SHEARING OF THE ADJACENT BASE RESULTS, THE CONTRACTOR SHALL REMOVE ADDITIONAL BASE MATERIAL UNTIL A VERTICAL FACE IS ACHIEVED.

5. THE MAXIMUM WIDTH OF A BRICK MORTAR JOINT SHALL BE $\frac{1}{2}$ INCH. THIS RESTRICTION SHALL ALSO APPLY TO THE JOINT FORMED ADJACENT TO THE PERIMETER OF A REPAIR AREA, WHERE THE ROWS MAY NOT BE PARALLEL TO ONE ANOTHER.

6. MORTARING OF JOINTS: ALL JOINTS SHALL BE MORTARED WITH A 50/50 MIXTURE BY VOLUME OF SAND AND CEMENT SO AS TO PROVIDE A FLUSH FINISH. THIS MAY REQUIRE MORE THAN ONE APPLICATION. FURTHER, MECHANICAL VIBRATION WILL BE REQUIRED FOR CONSOLIDATION OF DRY MORTAR MIX.

NOTE 'G' : FOR ALLEY REPAIRS, THE PAVEMENT REPLACEMENT SHALL CONFORM TO THE TYPE AND THICKNESS OF THE EXISTING PAVEMENT. CHIP AND SEAL TYPE ALLEYS SHALL REQUIRE MATCHING THE EXISTING THICKNESS OF PAVEMENT WITH THE APPROPRIATE COMBINATION OF MATERIALS BASED ON THE SIZE OF THE EXCAVATION. THE MINIMUM SHALL CONSIST OF 6" OF ITEM 448 ASPHALT CONCRETE. FINISHED CONCRETE PAVEMENT IS NOT PERMITTED. MATERIALS USED SHALL CONFORM TO THE REQUIREMENTS OF THE CURRENT CMSC.

IF MORE THAN $\frac{1}{3}$ OF THE WIDTH OF AN ALLEY IS REMOVED, THE PAVEMENT SHALL BE REPLACED AS PER TYPE 1 AND THEN OVERLAYED OVER THE TOTAL WIDTH OF PAVEMENT AND LENGTH OF TRENCH.

NOTE 'H' : ITEM 912 - COMPACTED GRANULAR MATERIAL:
THIS METHOD OF BACKFILL CAN ONLY BE USED WITH FULL TIME CITY INSPECTION. AN INSPECTION FEE MUST BE POSTED WHEN THE PERMIT IS ISSUED.

NOTE 'I' : CONCRETE BASE OR PAVEMENT
IF PAVING REQUIREMENTS ALLOW FOR SUFFICIENT CURING TIME SO THAT FAST SETTING CONCRETE IS NOT NEEDED, STANDARD CONCRETE BASE OR PAVEMENT MAY BE PLACED AS PER THE CMSC. THIS OPTION MUST BE NOTED ON THE PERMIT APPLICATION AND APPROVED BY THE CITY OF COLUMBUS.

NOTE 'J' : THE TRENCH WIDTH FOR SMALL PIPES AND CONDUITS SHALL BE OF SUFFICIENT WIDTH TO ALLOW FOR THE PROPER PLACEMENT OF THE BACKFILL MATERIAL. THE PAVEMENT PORTION OF THE TRENCH SHALL BE A MINIMUM OF 2 FT IN WIDTH. THIS IS TO ALLOW FOR THE PROPER COMPACTION OF THE ASPHALT PAVEMENT. IF THE TRENCH FOR PLACING CONDUIT IS NARROWER THAN 2 FT THEN THE PAVEMENT PORTION SHALL BE CUT BACK TO PROVIDE THE 2 FT MINIMUM FOR PAVING OPERATIONS.

PAVEMENT & UTILITY CUT REPAIR STANDARDS

CITY OF COLUMBUS, OHIO
DEPARTMENT OF PUBLIC SERVICE
DIVISION OF DESIGN AND CONSTRUCTION

STD DWG
1441
12/1/13
SHT 5 OF 7

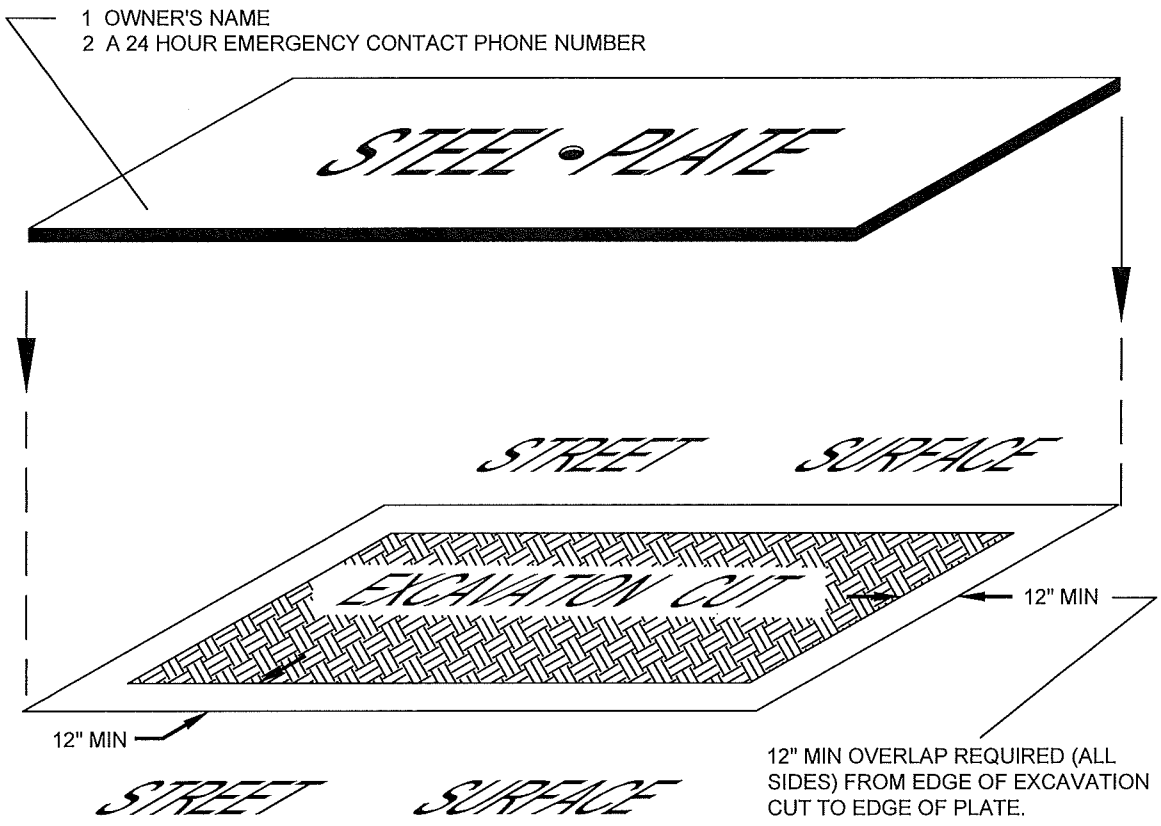

ALL STEEL PLATES MUST HAVE THE FOLLOWING INFORMATION CLEARLY AND LEGIBLY 'ETCHED' INTO THEIR TOP SURFACE:

1 OWNER'S NAME
2 A 24 HR. EMERGENCY CONTACT PHONE NUMBER.

NO STEEL PINS ARE PERMITTED.

SEE SHEET 7 FOR SIGNING REQUIREMENTS.

STEEL PLATE REQUIREMENTS

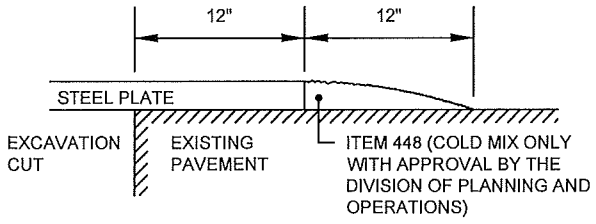

PAVEMENT & UTILITY CUT REPAIR STANDARDS

CITY OF COLUMBUS, OHIO
DEPARTMENT OF PUBLIC SERVICE
DIVISION OF DESIGN AND CONSTRUCTION

STD DWG
1441
12/1/13
SHT 6 OF 7

SIGNS ARE TO BE 36" x 36" FOR RESIDENTIAL AND DOWNTOWN AREAS AND 48" x 48" ON MULTI-LANE, HIGH SPEED (45 MPH OR GREATER) ROADWAYS.

SIGN COC - 327 (R/L) IS REQUIRED AT ALL PLATE LOCATIONS. SIGN COC - 328 IS REQUIRED WHEN POSTED SPEED IS 35 MPH OR GREATER.

SIGNS SHOULD BE PLACED IN ALL DIRECTIONS THAT ARE AFFECTED.

SIGNS SHOULD BE DUAL MOUNTED ON MULTI-LANE, ONE-WAY ROADWAYS.

ALL SIGNS SHALL BE MOUNTED IN ACCORANCE WITH THE OHIO MANUAL OF UNIFORM TRAFFIC CONTROL DEVICES (OMUTCD).

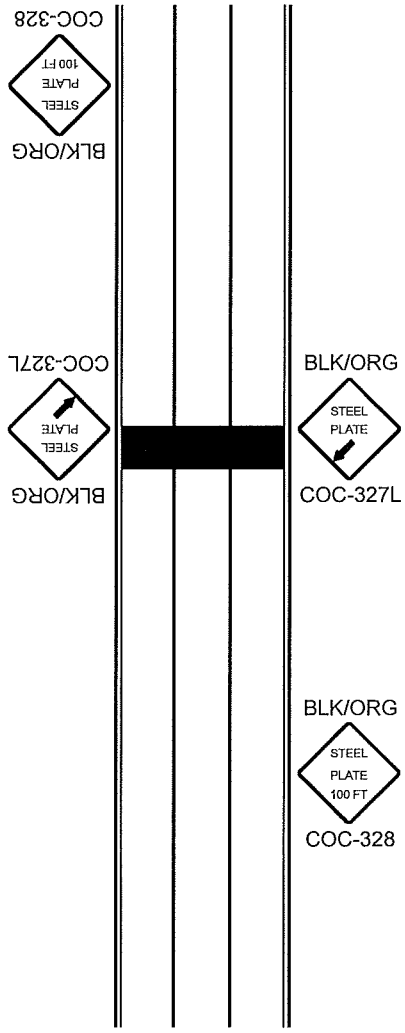

STEEL PLATE REQUIREMENTS

PAVEMENT & UTILITY CUT REPAIR STANDARDS

CITY OF COLUMBUS, OHIO
DEPARTMENT OF PUBLIC SERVICE
DIVISION OF DESIGN AND CONSTRUCTION

STD DWG
1441
12/1/13
SHT 7 OF 7

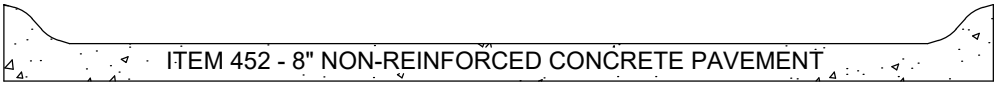

SECTION VIEW OF DRIVE

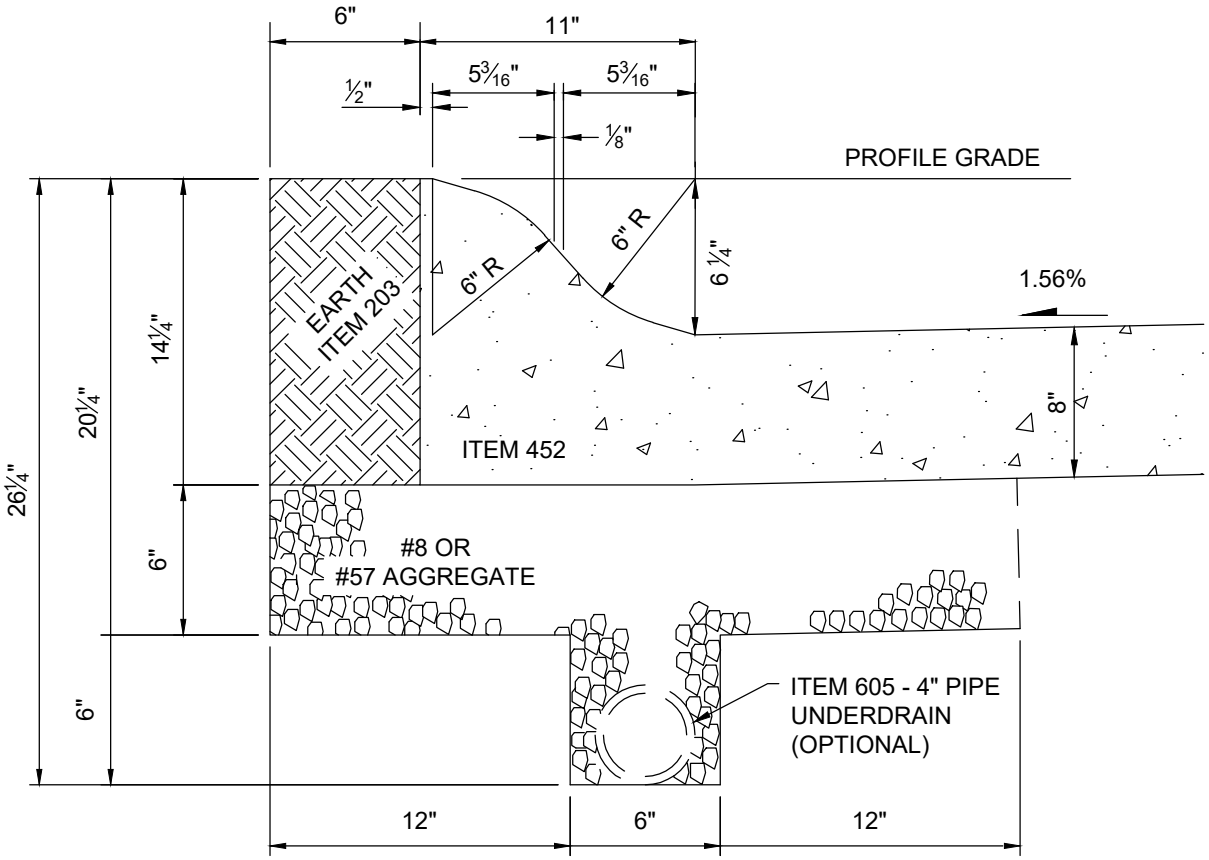

ITEM 452 - 8" NON-REINFORCED CONCRETE PAVEMENT WITH INTEGRAL CURB

INTEGRAL CURB, GUTTER, AND PAVEMENT FOR COMMERCIAL DRIVES	
CITY OF COLUMBUS, OHIO DEPARTMENT OF PUBLIC SERVICE DIVISION OF DESIGN AND CONSTRUCTION	STD DWG 2225
CITY ENGINEER	4/30/18
	SHT 1 OF 1

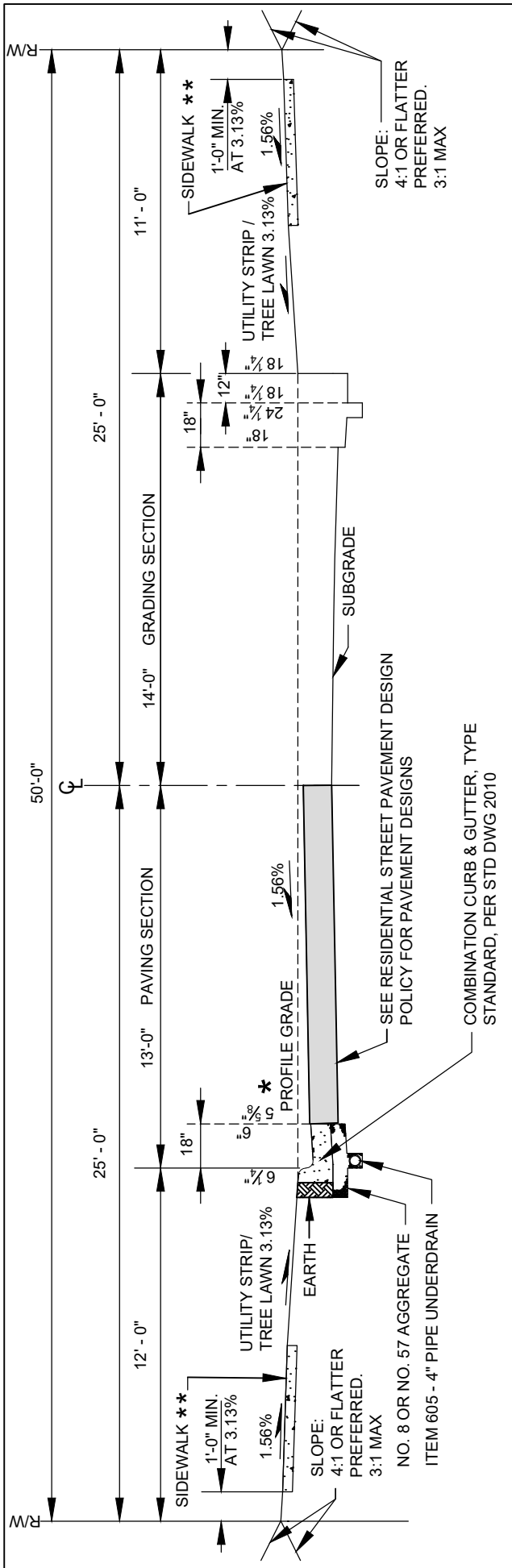

* FOR COMBINATION CURB AND GUTTER, TYPE STANDARD, THE PROFILE GRADE AND STRING LINE ELEVATIONS ARE THE SAME.

** SIDEWALK WIDTH PER STANDARD DRAWING 2300.

A MINIMUM 7FT WIDE PEDESTRIAN ACCESS ROUTE (PAR) SHALL BE PROVIDED BETWEEN OPPOSING RAMPS AND SHALL HAVE A CROSS-SLOPE (THE LONGITUDINAL STREET SLOPE) NO GREATER THAN 1.56%.

26' SECTION (RESIDENTIAL) COMBINATION CURB & GUTTER, TYPE STANDARD

CITY OF COLUMBUS, OHIO
DEPARTMENT OF PUBLIC SERVICE
DIVISION OF DESIGN AND CONSTRUCTION

CITY ENGINEER

STD DWG
2100

3/30/2018

SHT 1 OF 1

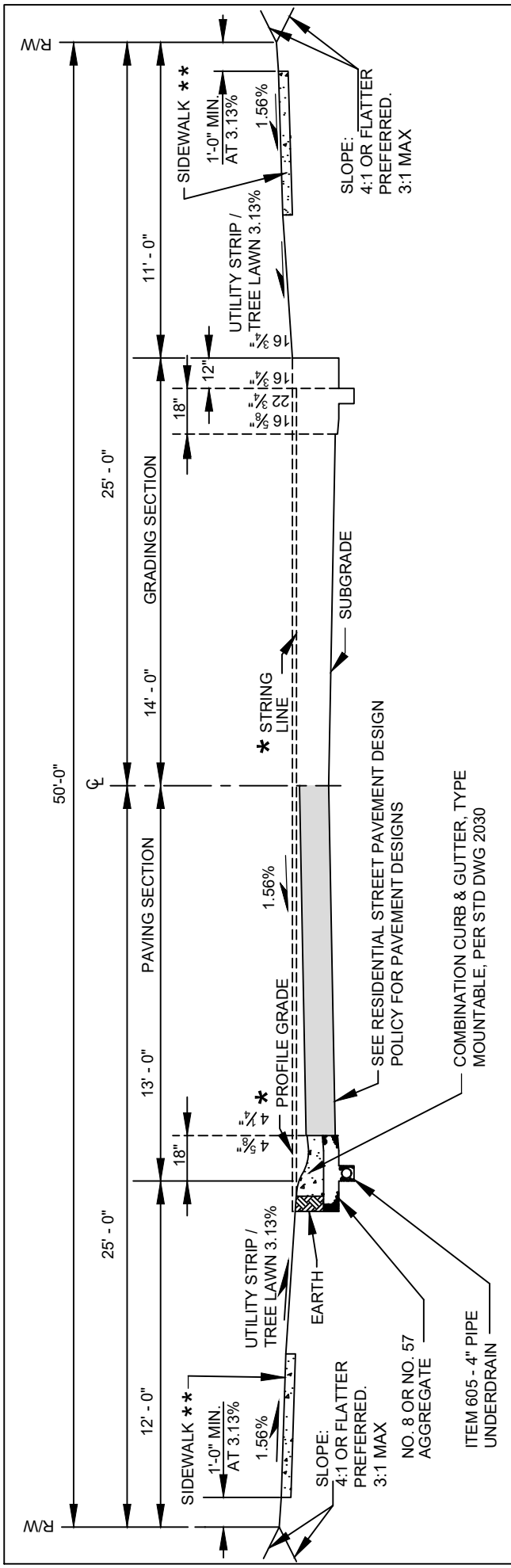

* FOR COMBINATION CURB AND GUTTER, TYPE MOUNTABLE, THE PROFILE GRADE ELEVATION IS 1 ½" ABOVE THE STRING LINE. ALL MEASUREMENTS ARE TAKEN FROM THE STRING LINE.

** SIDEWALK WIDTH PER STANDARD DRAWING 2300.

A MINIMUM 7FT WIDE PEDESTRIAN ACCESS ROUTE (PAR) SHALL BE PROVIDED BETWEEN OPPOSING RAMPS AND SHALL HAVE A CROSS-SLOPE (THE LONGITUDINAL STREET SLOPE) NO GREATER THAN 1.56%.

26' SECTION (RESIDENTIAL) COMBINATION CURB & GUTTER, TYPE MOUNTABLE

CITY OF COLUMBUS, OHIO
DEPARTMENT OF PUBLIC SERVICE
DIVISION OF DESIGN AND CONSTRUCTION

CITY ENGINEER

STD DWG
2101

3/30/2018

SHT 1 OF 1

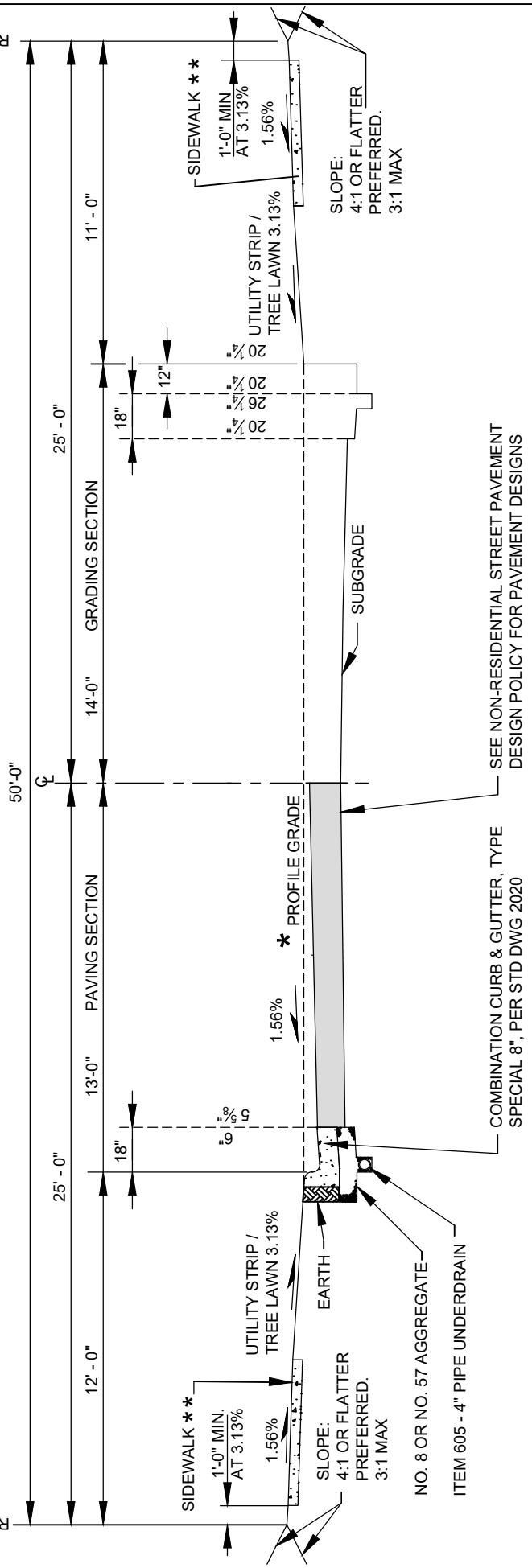

* FOR COMBINATION CURB AND GUTTER, TYPE SPECIAL 8", THE PROFILE GRADE AND STRING LINE ELEVATIONS ARE THE SAME.

** SIDEWALK WIDTH PER STANDARD DRAWING 2300.

A MINIMUM 7FT WIDE PEDESTRIAN ACCESS ROUTE (PAR) SHALL BE PROVIDED BETWEEN OPPOSING RAMPS AND SHALL HAVE A CROSS-SLOPE (THE LONGITUDINAL STREET SLOPE) NO GREATER THAN 1.56%.

26' SECTION (NON-RESIDENTIAL) COMBINATION CURB & GUTTER, TYPE SPECIAL 8"

CITY OF COLUMBUS, OHIO
DEPARTMENT OF PUBLIC SERVICE
DIVISION OF DESIGN AND CONSTRUCTION

CITY ENGINEER

STD DWG
2105

3/30/2018

SHT 1 OF 1

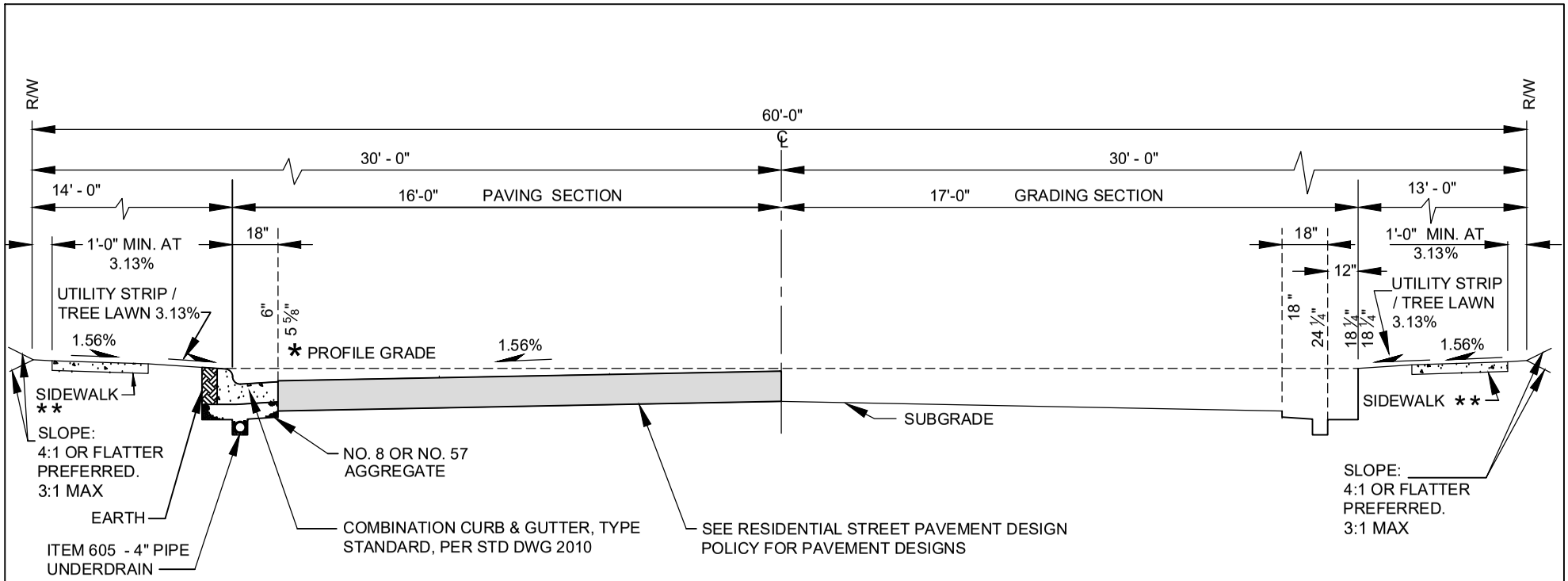

* FOR COMBINATION CURB AND GUTTER, TYPE STANDARD, THE PROFILE GRADE AND STRING LINE ELEVATIONS ARE THE SAME.

** SIDEWALK WIDTH PER STANDARD DRAWING 2300.

A MINIMUM 7FT WIDE PEDESTRIAN ACCESS ROUTE (PAR) SHALL BE PROVIDED BETWEEN OPPOSING RAMPS AND SHALL HAVE A CROSS-SLOPE (THE LONGITUDINAL STREET SLOPE) NO GREATER THAN 1.56%.

32' SECTION (RESIDENTIAL) COMBINATION CURB & GUTTER, TYPE STANDARD

CITY OF COLUMBUS, OHIO
DEPARTMENT OF PUBLIC SERVICE
DIVISION OF DESIGN AND CONSTRUCTION

CITY ENGINEER

STD DWG
2110

3/30/2018

SHT 1 OF 1

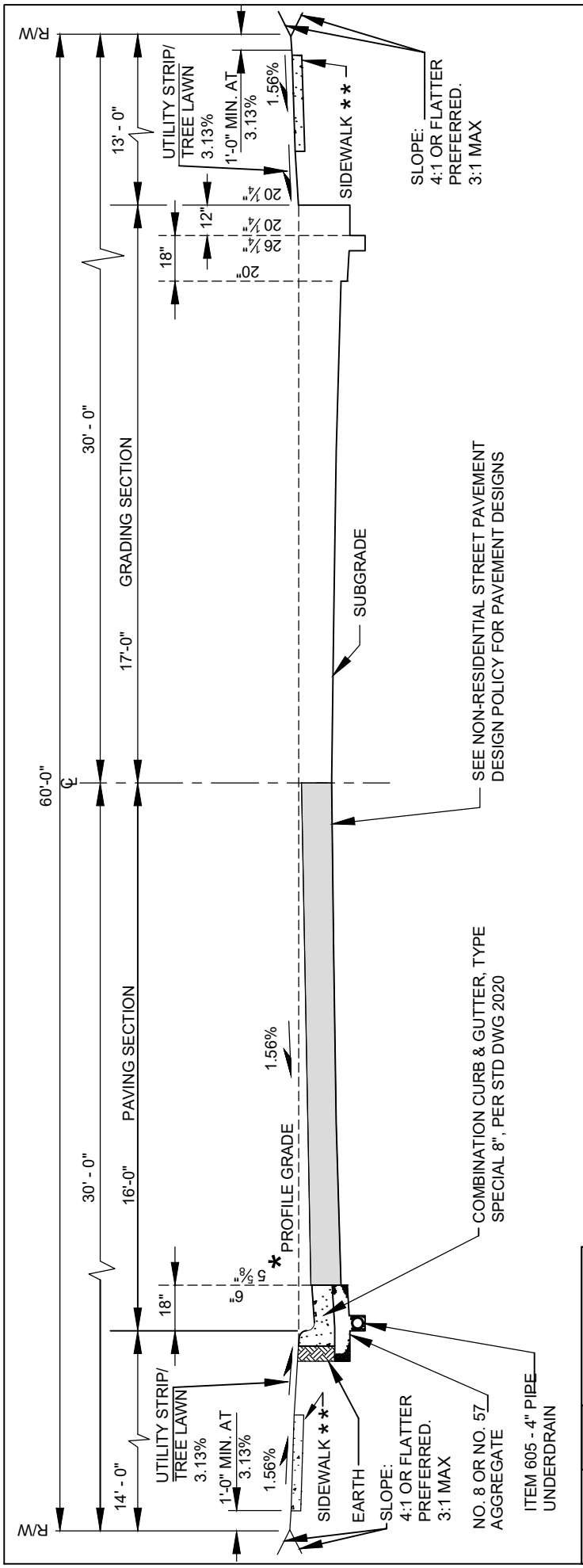

* FOR COMBINATION CURB AND GUTTER, TYPE SPECIAL 8", THE PROFILE GRADE AND STRING LINE ELEVATIONS ARE THE SAME.

* * SIDEWALK WIDTH PER STANDARD DRAWING 2300.

A MINIMUM 7FT WIDE PEDESTRIAN ACCESS ROUTE (PAR) SHALL BE PROVIDED BETWEEN OPPOSING RAMPS AND SHALL HAVE A CROSS-SLOPE (THE LONGITUDINAL STREET SLOPE) NO GREATER THAN 1.56%.

32' SECTION (NON-RESIDENTIAL) COMBINATION CURB & GUTTER, TYPE SPECIAL 8"

CITY OF COLUMBUS, OHIO
DEPARTMENT OF PUBLIC SERVICE
DIVISION OF DESIGN AND CONSTRUCTION

CITY ENGINEER

STD DWG
2111

3/30/2018

SHT 1 OF 1

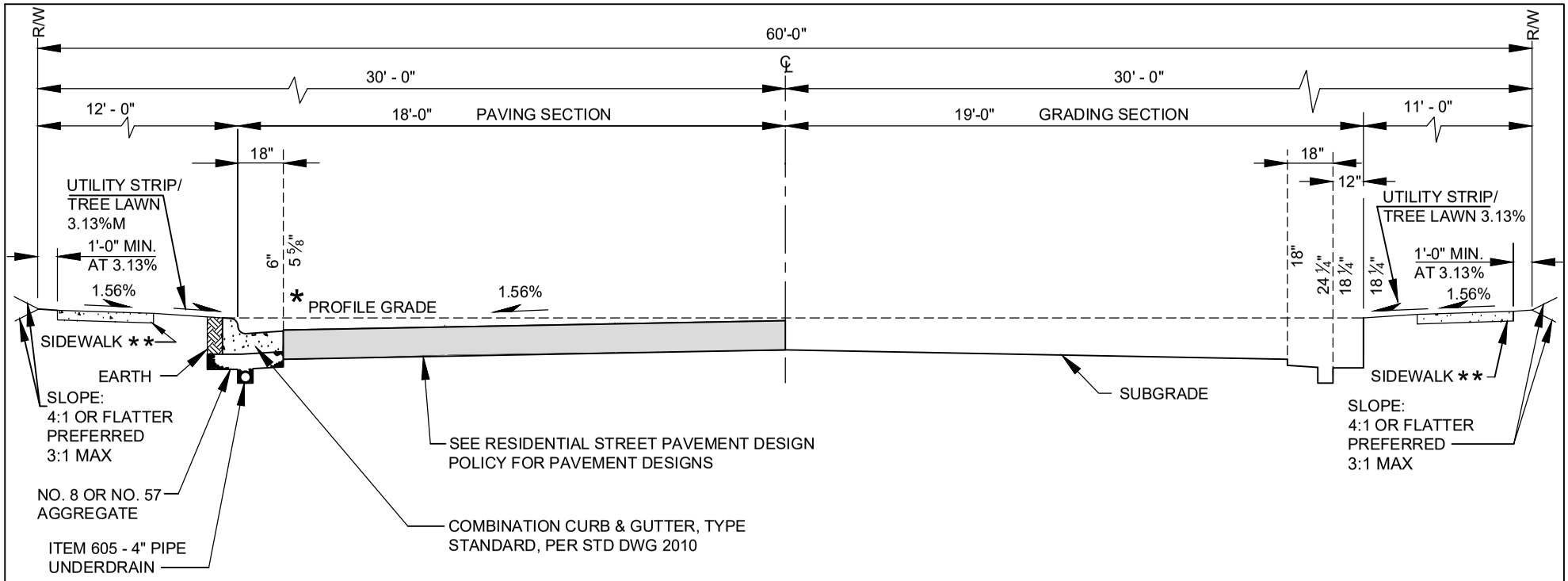

* FOR COMBINATION CURB AND GUTTER, TYPE STANDARD, THE PROFILE GRADE AND STRING LINE ELEVATIONS ARE THE SAME.

** SIDEWALK WIDTH PER STANDARD DRAWING 2300.

A MINIMUM 7FT WIDE PEDESTRIAN ACCESS ROUTE (PAR) SHALL BE PROVIDED BETWEEN OPPOSING RAMPS AND SHALL HAVE A CROSS-SLOPE (THE LONGITUDINAL STREET SLOPE) NO GREATER THAN 1.56%.

36' SECTION (RESIDENTIAL) COMBINATION CURB & GUTTER, TYPE STANDARD

CITY OF COLUMBUS, OHIO
DEPARTMENT OF PUBLIC SERVICE
DIVISION OF DESIGN AND CONSTRUCTION

CITY ENGINEER

STD DWG
2115

3/30/2018

SHT 1 OF 1

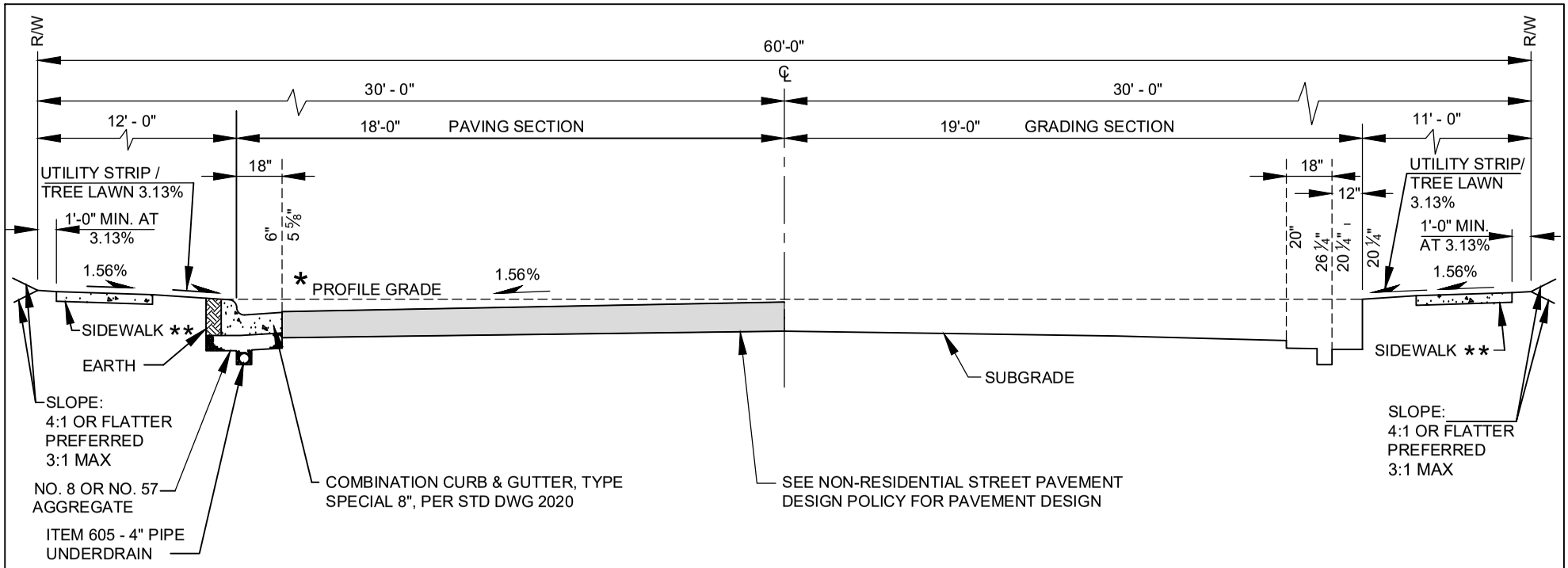

* FOR COMBINATION CURB AND GUTTER, TYPE SPECIAL 8", THE PROFILE GRADE AND STRING LINE ELEVATIONS ARE THE SAME.

** SIDEWALK WIDTH PER STANDARD DRAWING 2300.

A MINIMUM 7FT WIDE PEDESTRIAN ACCESS ROUTE (PAR) SHALL BE PROVIDED BETWEEN OPPOSING RAMPS AND SHALL HAVE A CROSS-SLOPE (THE LONGITUDINAL STREET SLOPE) NO GREATER THAN 1.56%.

36' SECTION (NON-RESIDENTIAL) COMBINATION CURB & GUTTER, TYPE SPECIAL 8"

CITY OF COLUMBUS, OHIO
DEPARTMENT OF PUBLIC SERVICE
DIVISION OF DESIGN AND CONSTRUCTION

CITY ENGINEER

STD DWG
2116

3/30/2018

SHT 1 OF 1

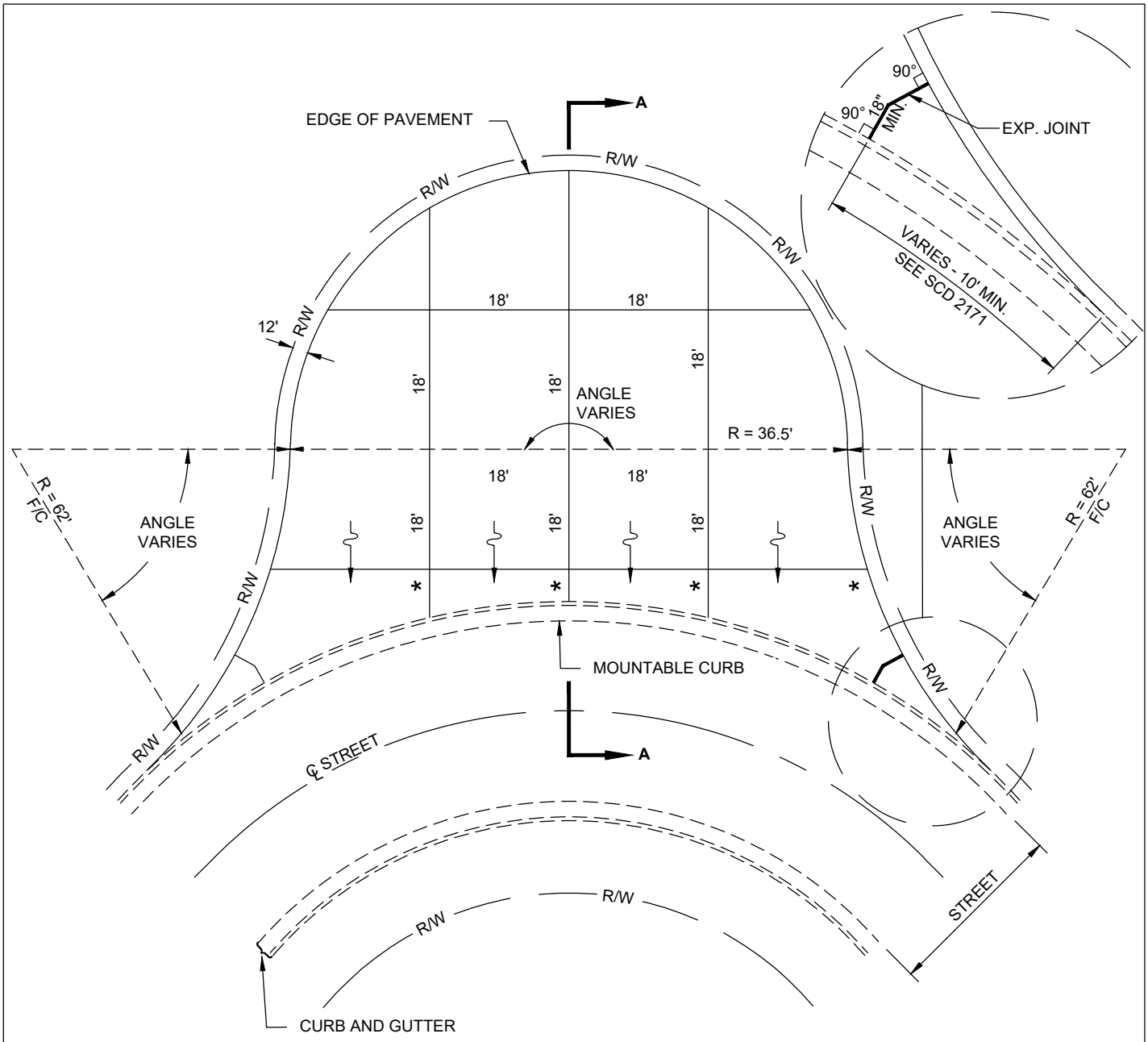

* VARIABLE - 2' MIN, 18' MAX

EYEBROW SHALL HAVE CONTINUOUS POSITIVE DRAINAGE TO STREET

JOINT SPACING DETAIL

EYEBROW

CITY OF COLUMBUS, OHIO
DEPARTMENT OF PUBLIC SERVICE
DIVISION OF DESIGN AND CONSTRUCTION

CITY ENGINEER

STD DWG
2154

06/01/18

SHT 1 OF 2

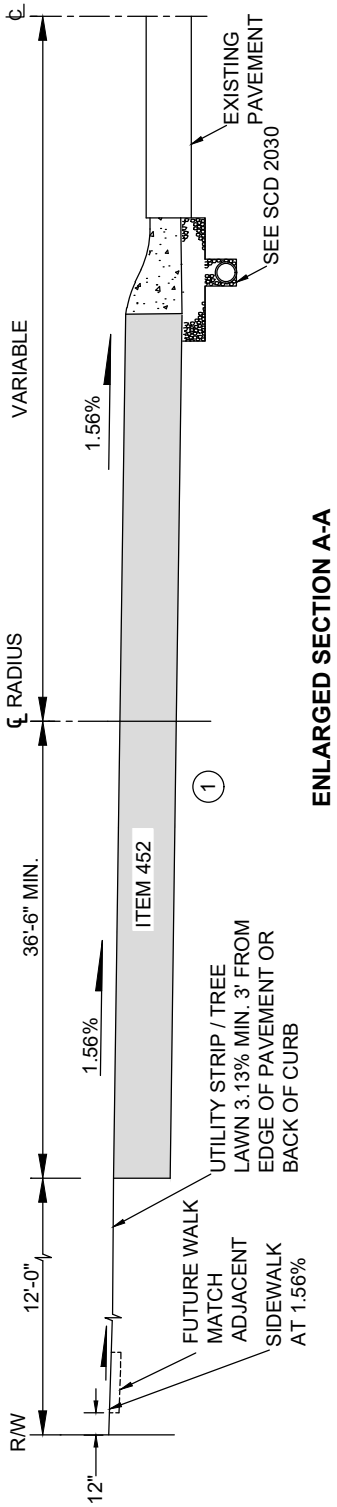

ENLARGED SECTION A-A

1 ITEM 452 - 7" NON-REINFORCED CONCRETE PAVEMENT.

TYPICAL SECTION
COMBINATION CURB &
GUTTER, TYPE MOUNTABLE

EYEBROW

CITY OF COLUMBUS, OHIO
DEPARTMENT OF PUBLIC SERVICE
DIVISION OF DESIGN AND CONSTRUCTION

STD DWG
2154

06/01/18

SHT 2 OF 2

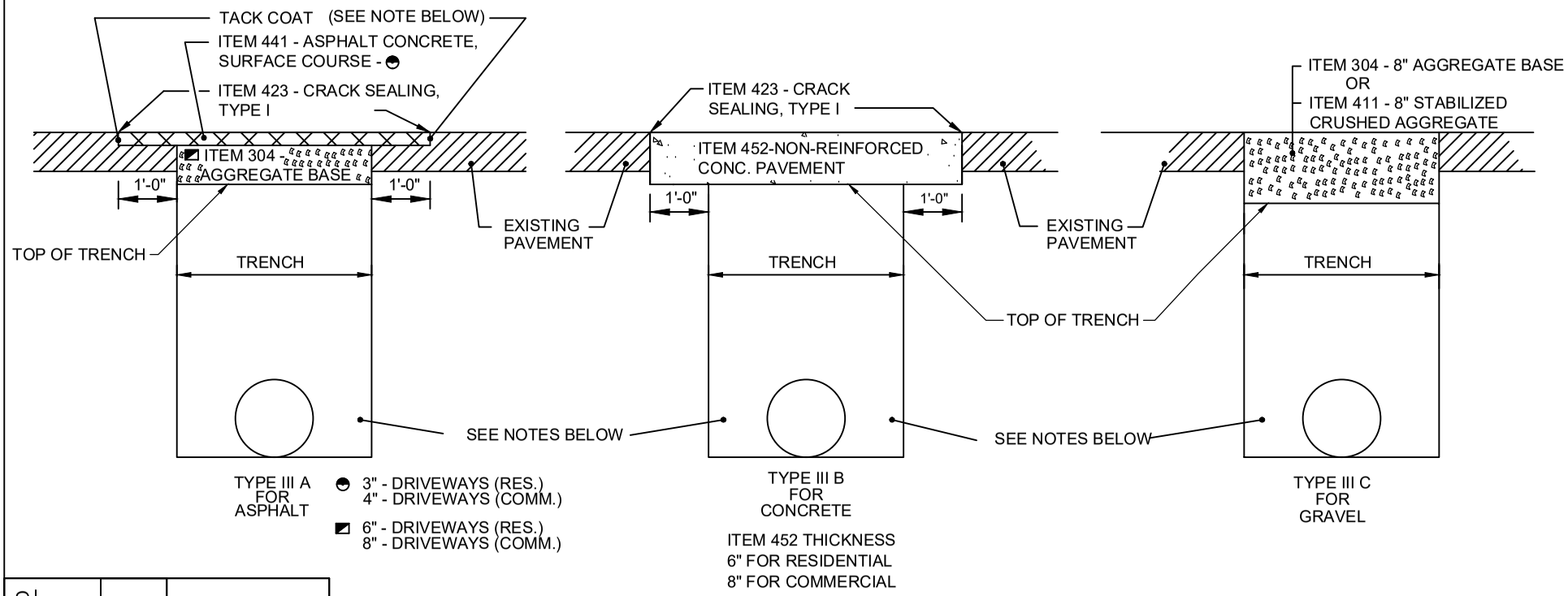

BACKFILL FOR ALL TRENCHES SHALL BE IN ACCORDANCE WITH APPLICABLE SPECIFICATIONS.

PERMANENT REPAVING SHALL NOT BE DONE UNTIL SO ORDERED OR APPROVED BY THE ENGINEER. THE EDGE SHALL BE CUT VERTICAL AND TRIMMED TO PROVIDE A STRAIGHT LINE.

ITEM 407 - TACK COAT SHALL BE APPLIED AT A RATE OF 0.08 GAL/SY.

ALL EXISTING CONCRETE WALKS OR CONCRETE PAVEMENTS BEING REPLACED SHALL BE REMOVED AT AN EXISTING JOINT AND REPLACED PER STANDARD DRAWING.

DRIVEWAY PAVEMENT SHALL BE REPLACED BY EITHER MATCHING THE EXISTING MATERIALS & THICKNESS, OR BY USING THE ABOVE THICKNESS, WHICHEVER IS GREATER.

IF COMPLETE DRIVE APPROACH IS BEING REBUILT REFERENCE THE STANDARD DRAWING APPLICABLE TO THE DRIVE.

DRIVEWAY REPLACEMENT

CITY OF COLUMBUS, OHIO
DEPARTMENT OF PUBLIC SERVICE
DIVISION OF DESIGN AND CONSTRUCTION

CITY ENGINEER

STD DWG
2160

04/30/18

SHT 1 OF 1

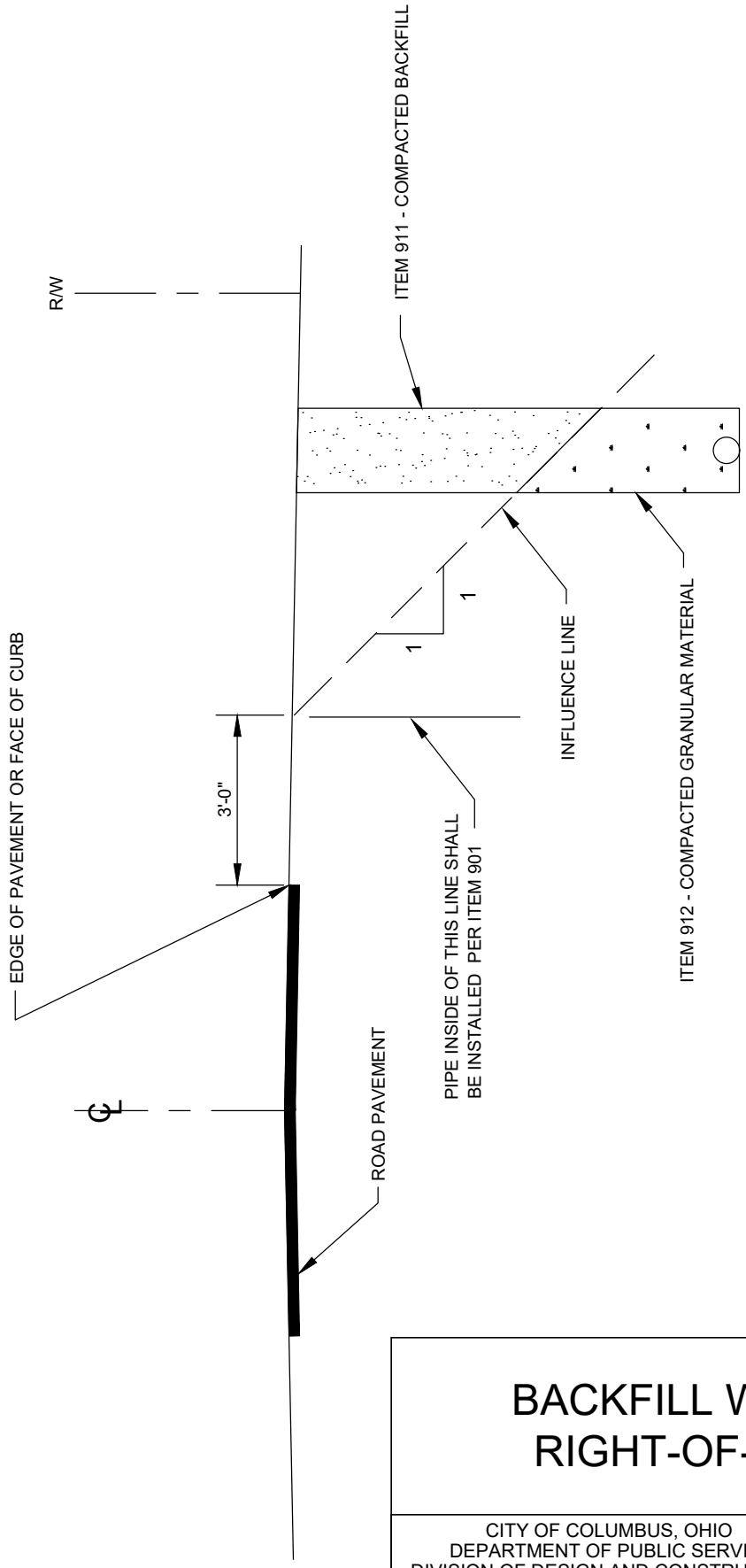

BACKFILL WITHIN RIGHT-OF-WAY

CITY OF COLUMBUS, OHIO
DEPARTMENT OF PUBLIC SERVICE
DIVISION OF DESIGN AND CONSTRUCTION

CITY ENGINEER

STD DWG
2179

04/30/18

SHT 1 OF 1

FOR USE ON A PARCEL WITH A SINGLE DWELLING

* CURB OR COMBINED CURB AND GUTTER SHALL BE TAKEN OUT AND REPLACED WITH CONCRETE, SEPARATED FROM THE DRIVE BY 1/2" PREMOLDED EXPANSION JOINT. WHEN LESS THAN 5 FT. OF A CURB SECTION REMAINS AFTER THE CURB CUT IS LOCATED, IT SHALL ALSO BE REMOVED AND REPLACED. CURB SHALL BE CONSTRUCTED IN MINIMUM 5 FT. SECTIONS AND MAXIMUM 10 FT. SECTIONS.

** SIDEWALK WIDTH SHALL BE PER STANDARD DRAWING 2300. SIDEWALK THICKNESS SHALL BE 6" CONCRETE TO ONE FULL PANEL (MIN. 5 FT.) BEYOND EDGE OF DRIVE.

*** 5 FT. ON ROADWAYS WITH 35 MPH SPEED LIMIT, 2 FT. FOR SPEED LIMITS LESS THAN 35 MPH.

PAR = PEDESTRIAN ACCESS ROUTE. SET PAR THROUGH APPROACH AT SIDEWALK GRADE TO AVOID RAMP OR TRANSITION. IF NOT POSSIBLE, THEN MINIMIZE TRANSITION FROM SIDEWALK TO APPROACH.

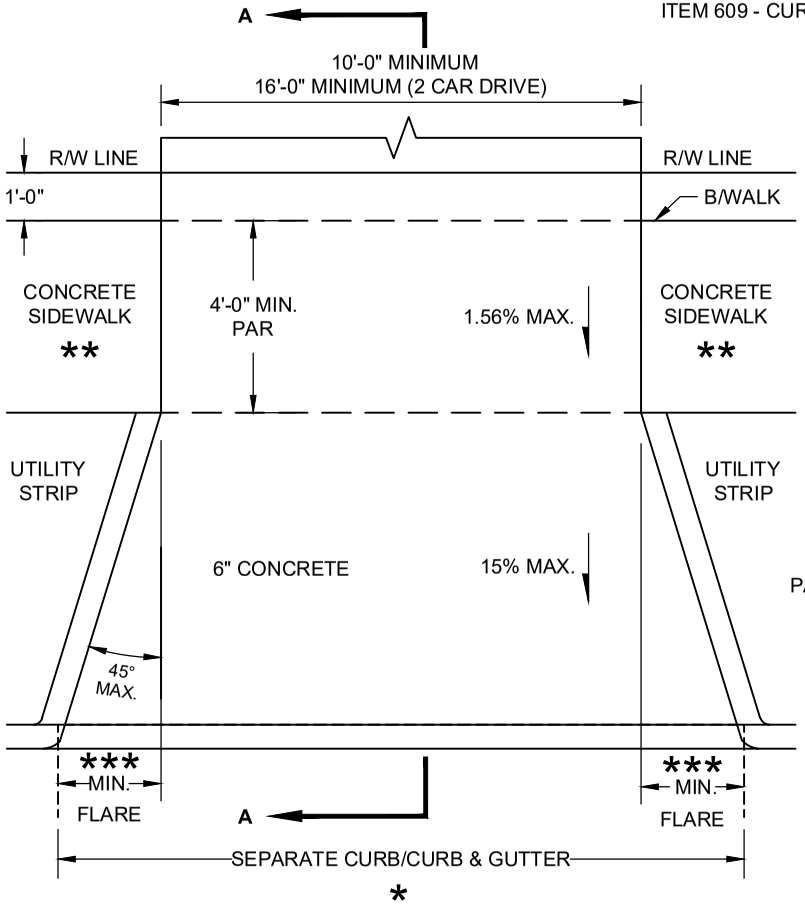

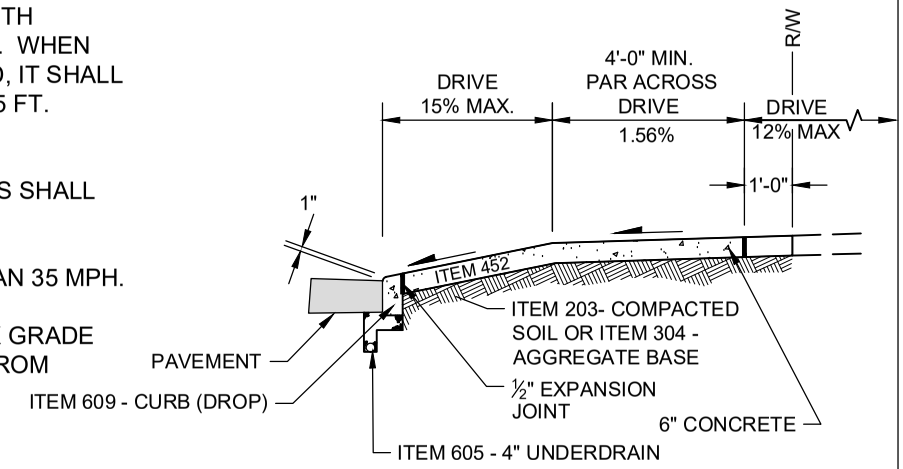

STRAIGHT CURB SECTION
SECTION A-A

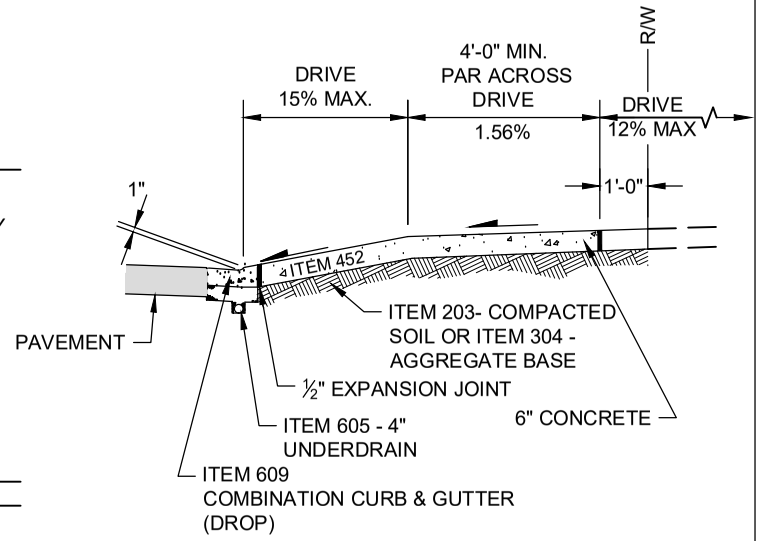

COMBINATION CURB AND GUTTER SECTION
SECTION A-A

DRIVEWAY, RESIDENTIAL CURBED ROADWAY

CITY OF COLUMBUS, OHIO
DEPARTMENT OF PUBLIC SERVICE
DIVISION OF DESIGN AND CONSTRUCTION

CITY ENGINEER

STD DWG
2201

04/30/18

SHT 1 OF 4

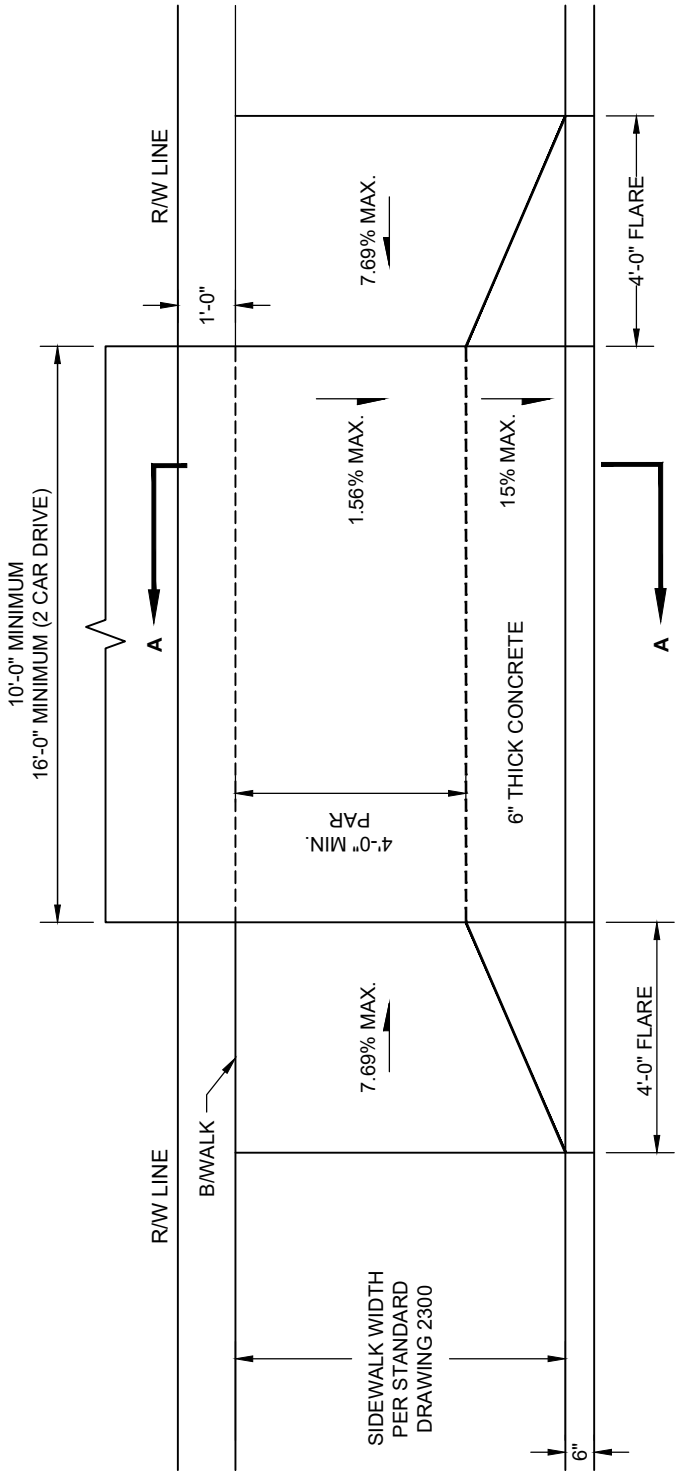

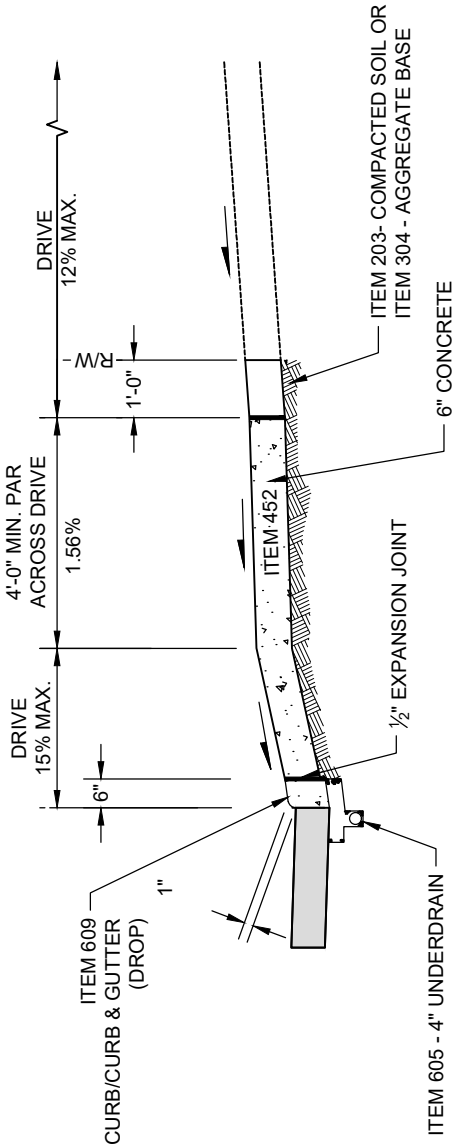

SECTION A-A
SEE SHEET 1 OF 4 FOR NOTES

SIDEWALK ADJACENT TO CURB

DRIVEWAY, RESIDENTIAL CURBED ROADWAY

CITY OF COLUMBUS, OHIO
DEPARTMENT OF PUBLIC SERVICE
DIVISION OF DESIGN AND CONSTRUCTION

STD DWG
2201
04/30/18
SHT 2 OF 4

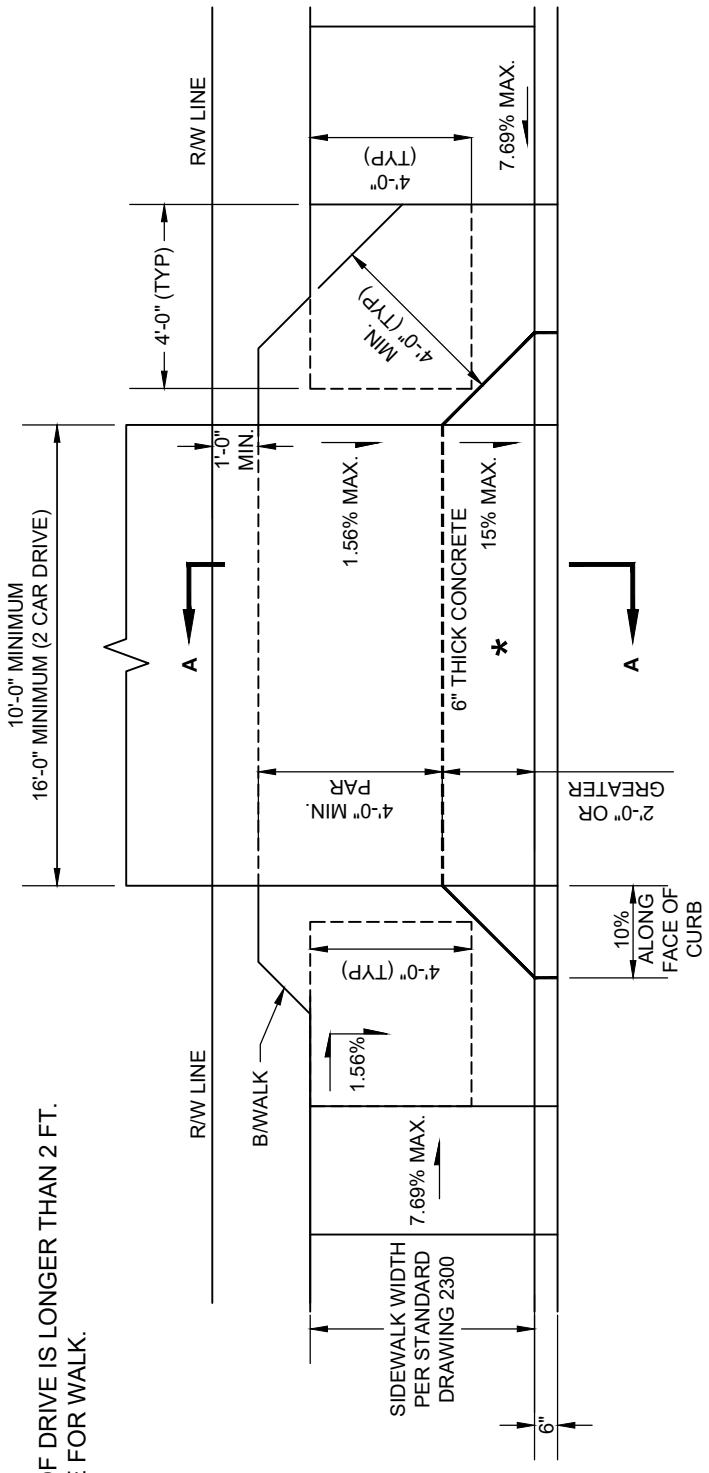

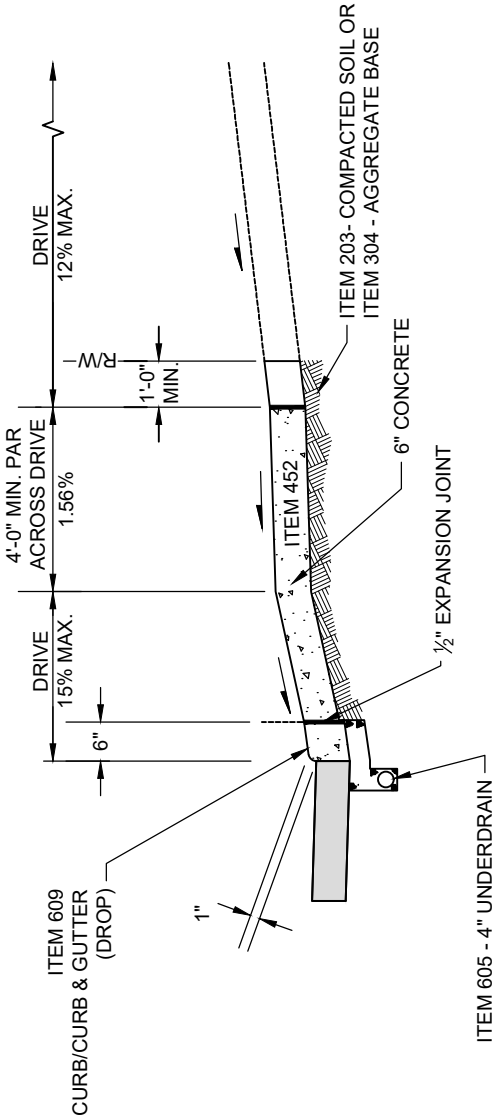

SECTION A-A
SEE SHEET 1 OF 4 FOR NOTES

SIDEWALK ADJACENT TO CURB WITH RUN-AROUND

* USE WHEN FRONT RAMP OF DRIVE IS LONGER THAN 2 FT. MAINTAIN R/W CLEARANCE FOR WALK.

DRIVEWAY, RESIDENTIAL CURBED ROADWAY

CITY OF COLUMBUS, OHIO
DEPARTMENT OF PUBLIC SERVICE
DIVISION OF DESIGN AND CONSTRUCTION

STD DWG
2201
04/30/18
SHT 3 OF 4

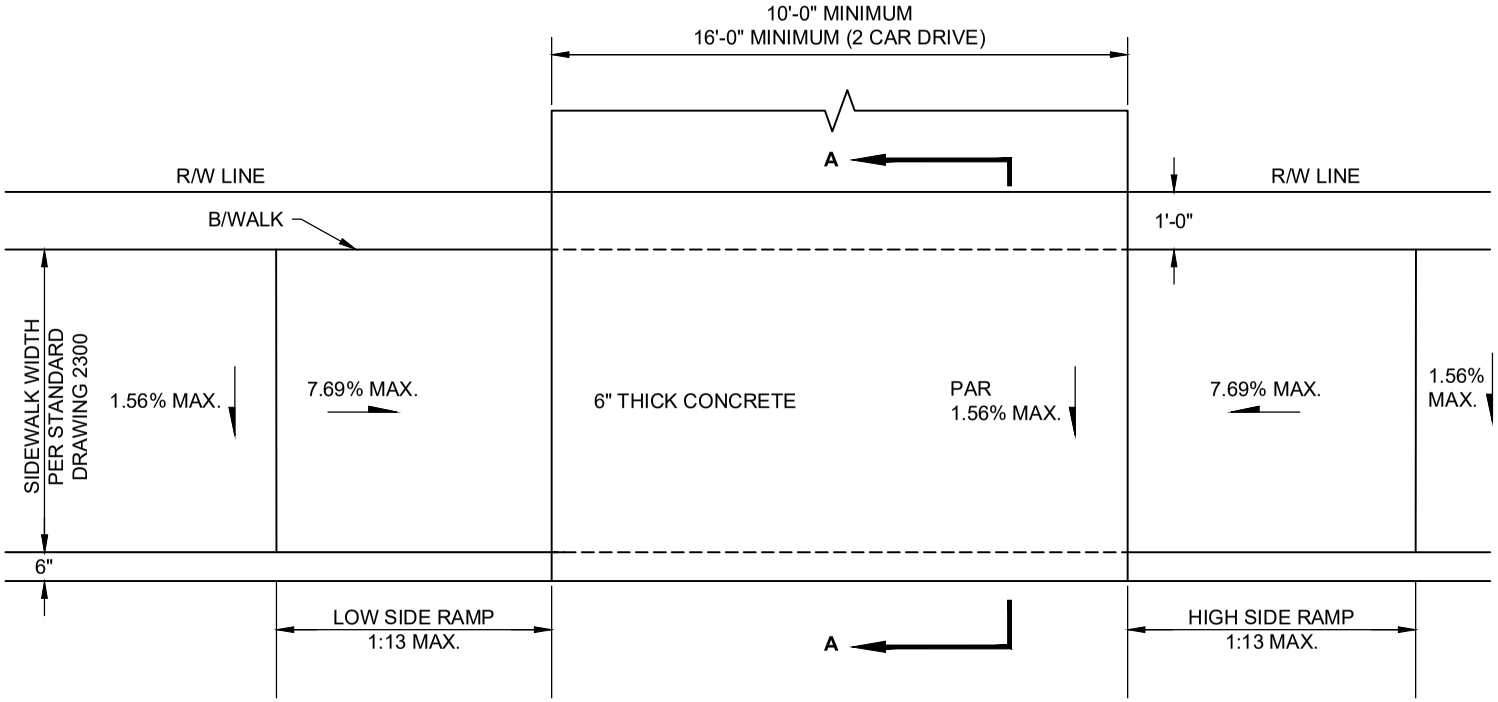

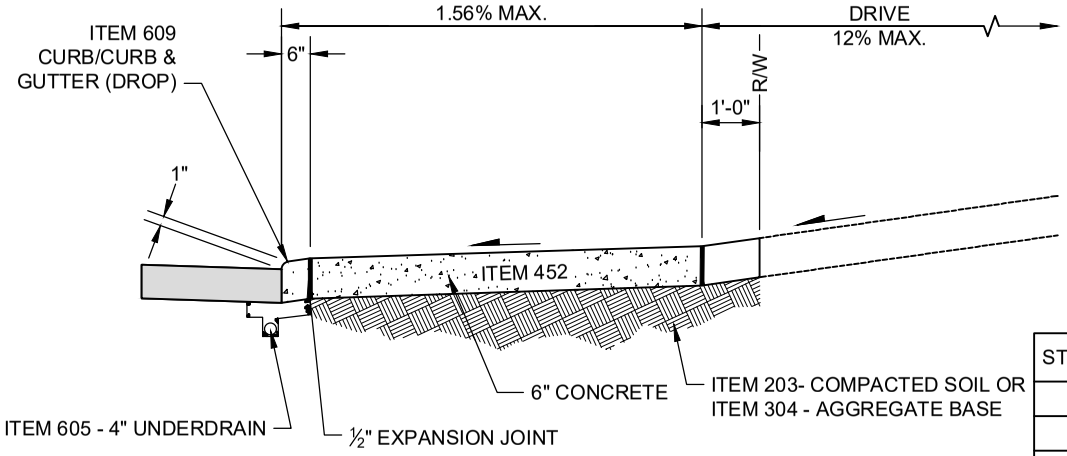

SECTION A-A

SEE SHEET 1 OF 4 FOR NOTES

STREET GRADE	RAMP LENGTH (1:13)	
	LOW SIDE *	HIGH SIDE *
1%	5'-6"	7'-2"
2%	5'-0"	8'-4"
3%	4'-6"	10'-0"
4%	4'-2"	12'-6"
5%	3'-10"	16'-8"

* MEASURED ALONG THE BACK OF CURB

SIDEWALK ADJACENT TO CURB

DRIVEWAY, RESIDENTIAL CURBED ROADWAY

CITY OF COLUMBUS, OHIO
DEPARTMENT OF PUBLIC SERVICE
DIVISION OF DESIGN AND CONSTRUCTION

STD DWG
2201
04/30/18

THIS STANDARD DRAWING IS FOR DRIVES ON LOCAL OR COLLECTOR STREETS WITH SPEEDS ≤ 35 MPH, UNLESS APPROVED OTHERWISE BY DEPARTMENT OF PUBLIC SERVICE.

* CURB OR COMBINED CURB AND GUTTER SHALL BE TAKEN OUT AND REPLACED WITH CONCRETE, SEPARATED FROM THE DRIVE BY 1/2" PREMOLDED EXPANSION JOINT. WHEN LESS THAN 5 FT. OF A CURB SECTION REMAINS AFTER THE CURB CUT IS LOCATED, IT SHALL ALSO BE REMOVED AND REPLACED. CURB SHALL BE CONSTRUCTED IN MINIMUM 5 FT. SECTIONS AND MAXIMUM 10 FT. SECTIONS.

** SIDEWALK WIDTH SHALL BE PER STANDARD DRAWING 2300. SIDEWALK THICKNESS SHALL BE 8" CONCRETE TO ONE FULL PANEL (MIN. 5 FT.) BEYOND EDGE OF DRIVE.

PAR = PEDESTRIAN ACCESS ROUTE. SET PAR THROUGH APPROACH AT SIDEWALK GRADE TO AVOID RAMP OR TRANSITION. IF NOT POSSIBLE, THEN MINIMIZE TRANSITION FROM SIDEWALK TO APPROACH.

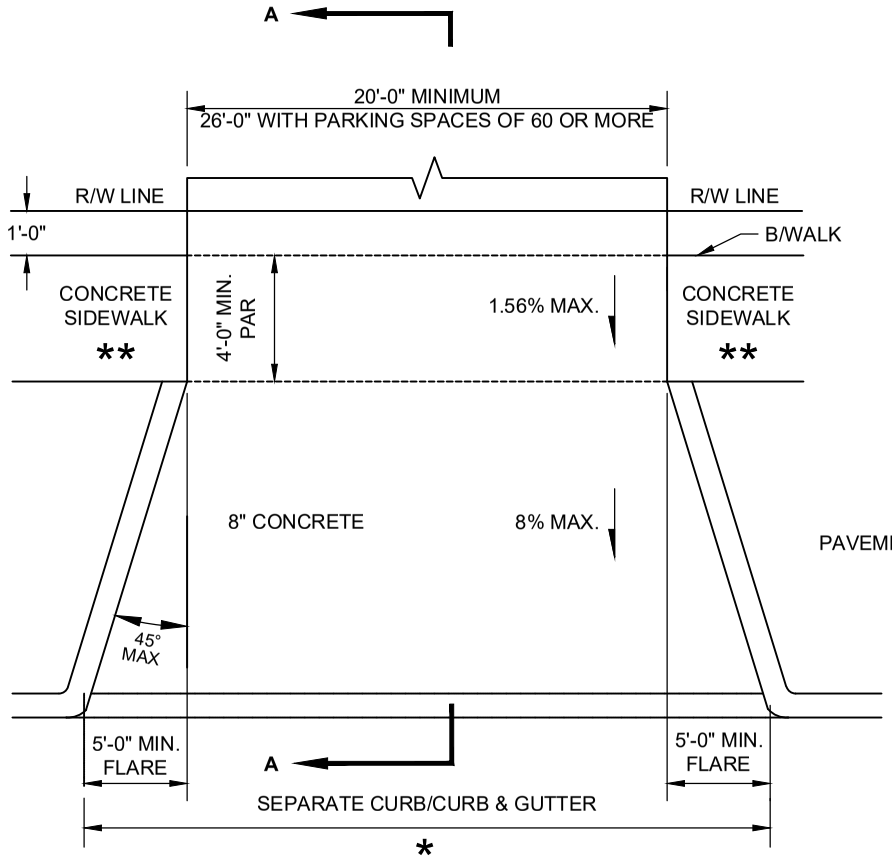

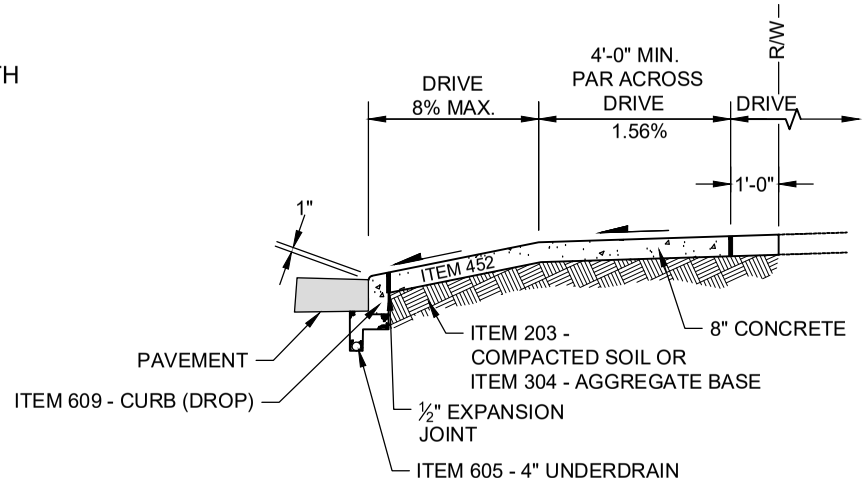

STRAIGHT CURB SECTION
SECTION A-A

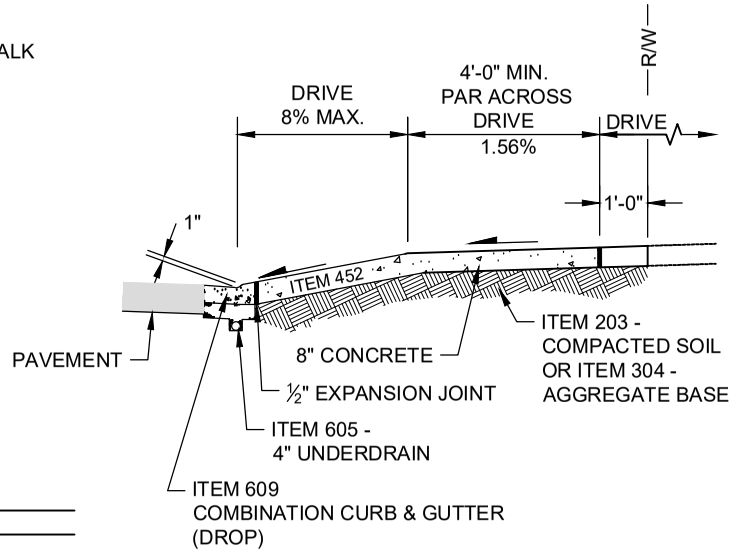

COMBINATION CURB AND GUTTER SECTION
SECTION A-A

DRIVEWAY, NON-RESIDENTIAL WITH FLARES CURBED ROADWAY

CITY OF COLUMBUS, OHIO
DEPARTMENT OF PUBLIC SERVICE
DIVISION OF DESIGN AND CONSTRUCTION

CITY ENGINEER

STD DWG
2202

04/30/18

SHT 1 OF 4

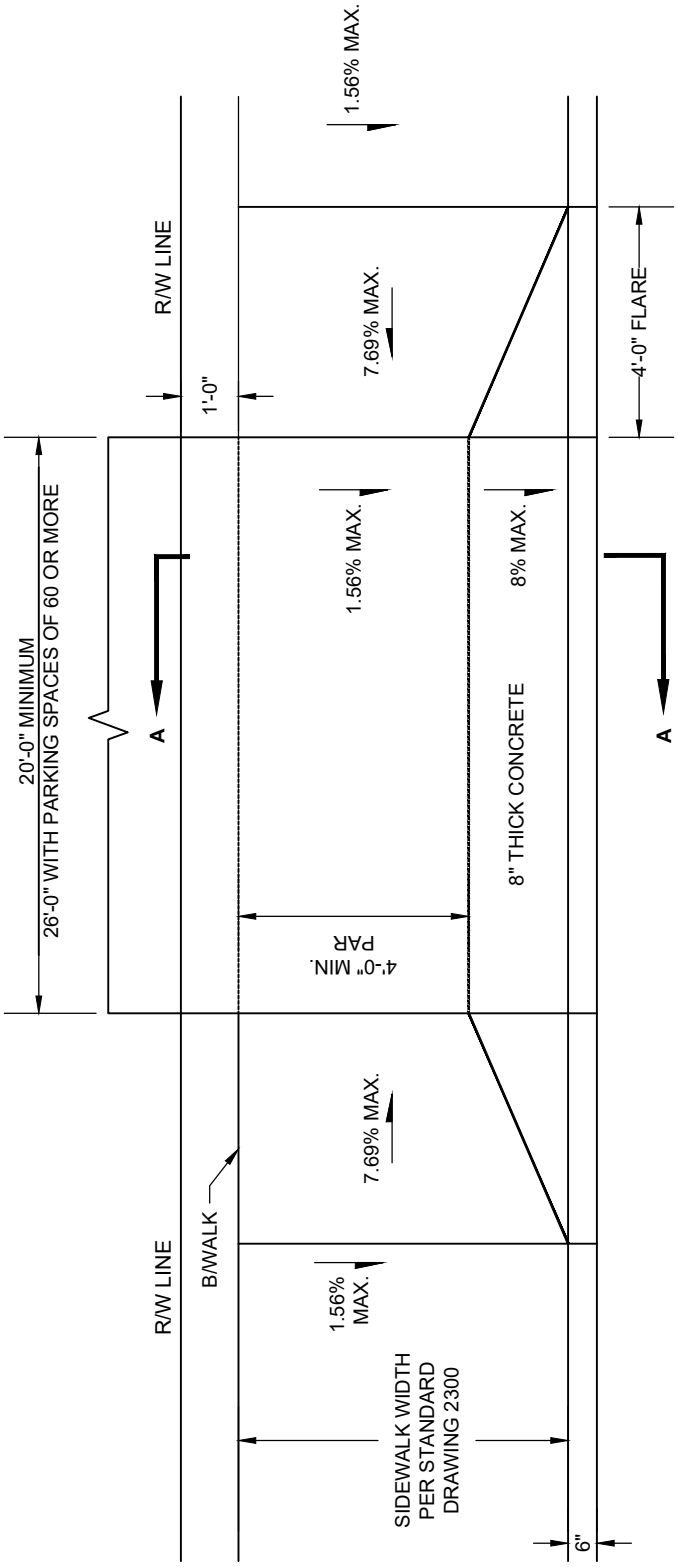

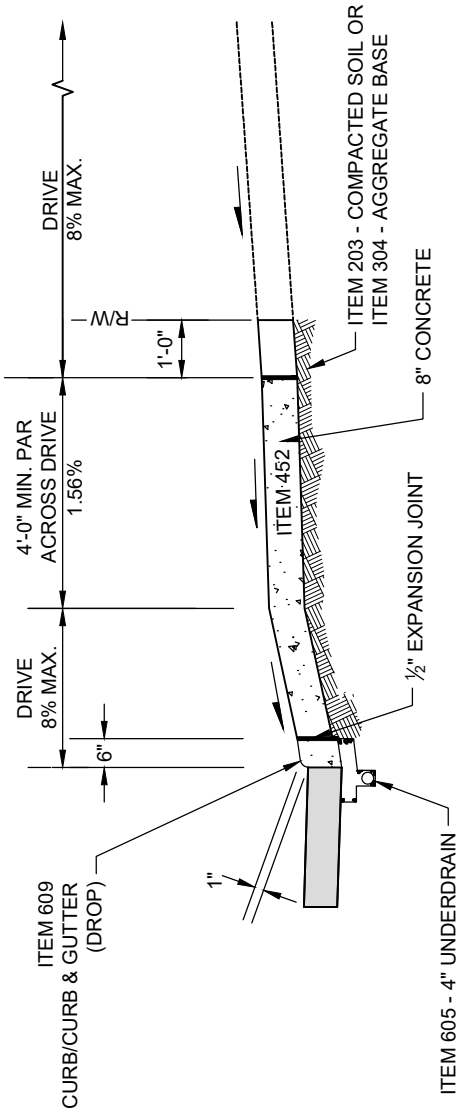

SECTION A-A
SEE SHEET 1 OF 4 FOR NOTES

SIDEWALK ADJACENT TO CURB

DRIVEWAY, NON-RESIDENTIAL WITH FLARES CURBED ROADWAY

CITY OF COLUMBUS, OHIO
DEPARTMENT OF PUBLIC SERVICE
DIVISION OF DESIGN AND CONSTRUCTION

STD DWG
2202

04/30/18

SHT 2 OF 4

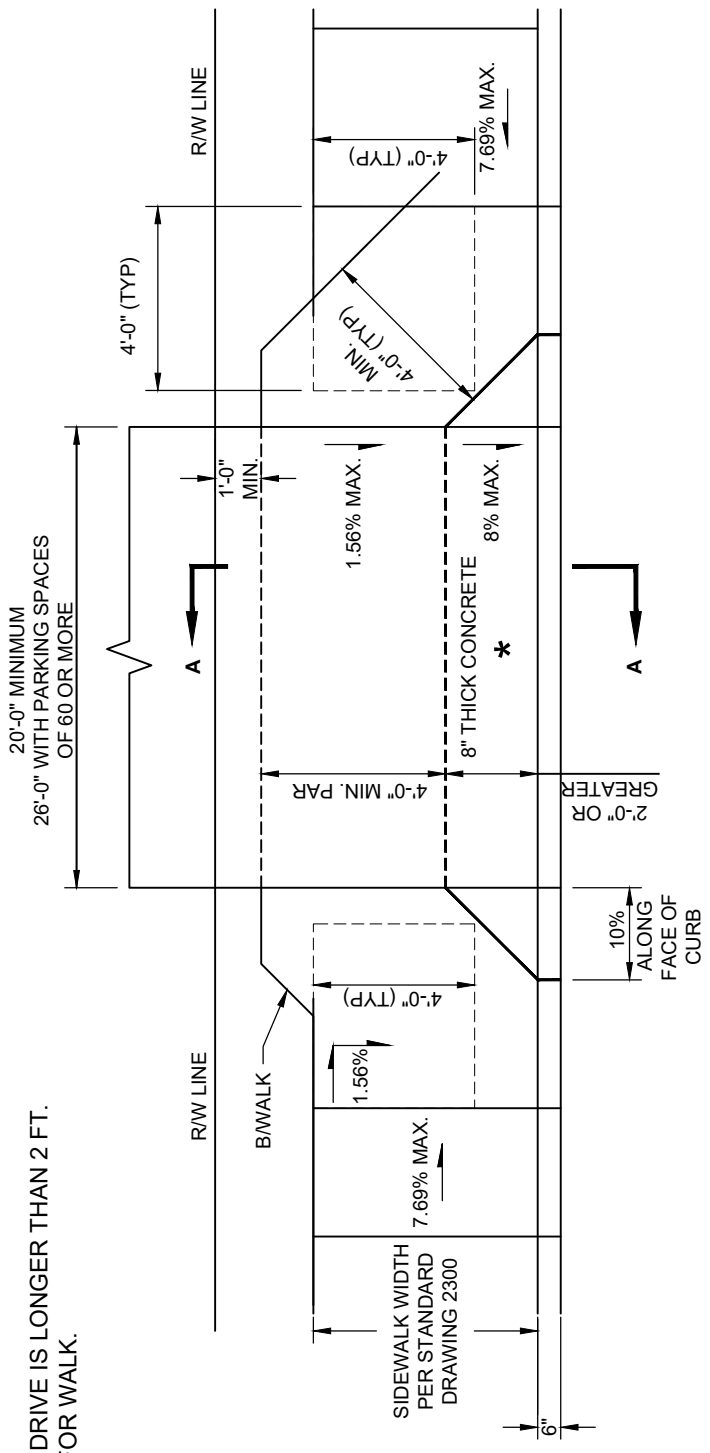

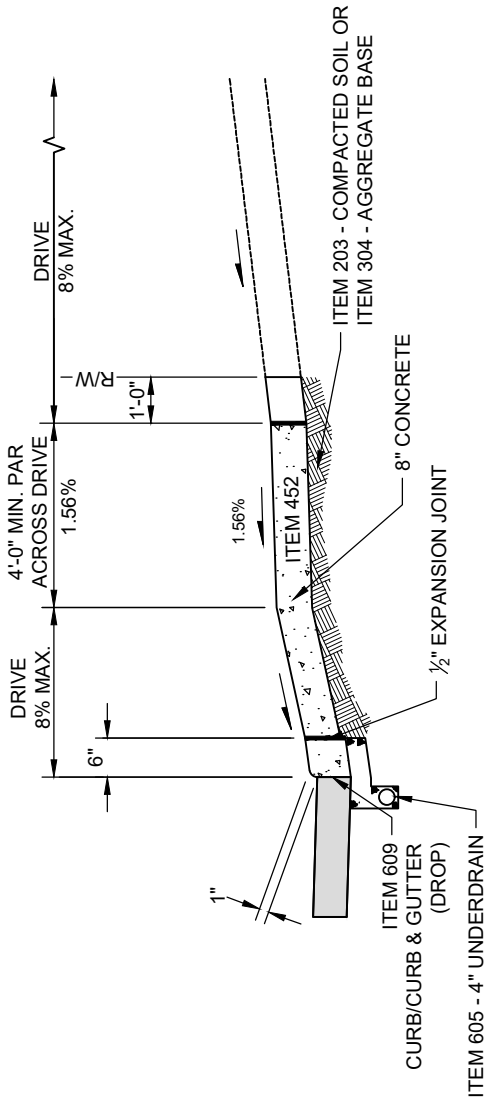

SECTION A-A
SEE SHEET 1 OF 4 FOR NOTES

* USE WHEN FRONT RAMP OF DRIVE IS LONGER THAN 2 FT.
MAINTAIN R/W CLEARANCE FOR WALK.

SIDEWALK ADJACENT TO
CURB WITH RUN-AROUND

DRIVEWAY, NON-RESIDENTIAL WITH FLARES CURBED ROADWAY

CITY OF COLUMBUS, OHIO
DEPARTMENT OF PUBLIC SERVICE
DIVISION OF DESIGN AND CONSTRUCTION

STD DWG
2202
04/30/18
SHT 3 OF 4

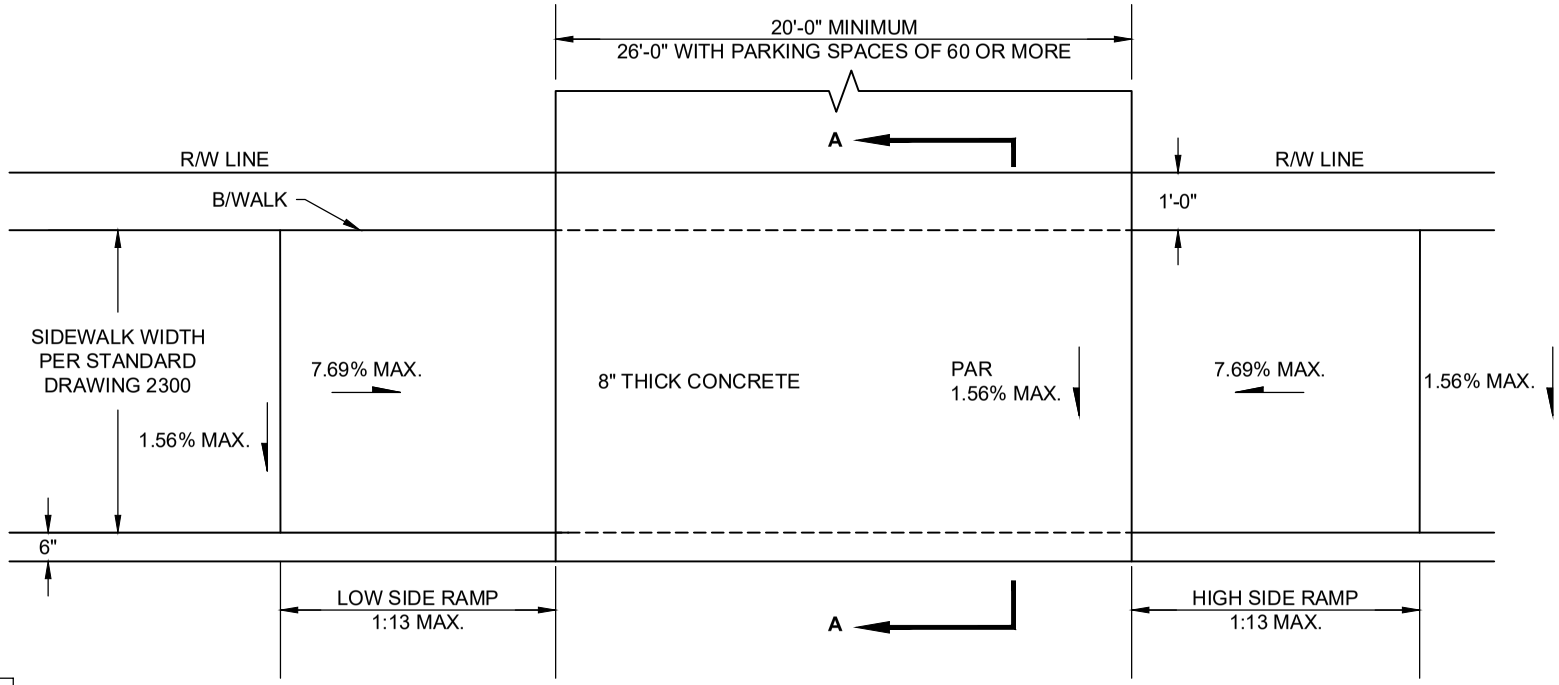

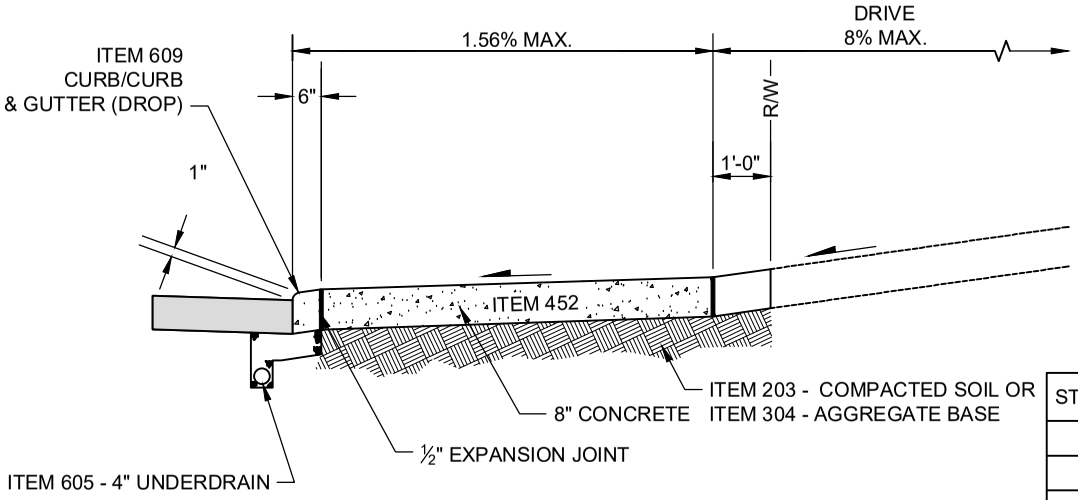

SECTION A-A
SEE SHEET 1 OF 4 FOR NOTES

STREET GRADE	RAMP LENGTH (1:13)	
	LOW SIDE *	HIGH SIDE *
1%	5'-6"	7'-2"
2%	5'-0"	8'-4"
3%	4'-6"	10'-0"
4%	4'-2"	12'-6"
5%	3'-10"	16'-8"

* MEASURED ALONG THE BACK OF CURB

SIDEWALK ADJACENT TO CURB

DRIVEWAY, NON-RESIDENTIAL WITH FLARES CURBED ROADWAY

CITY OF COLUMBUS, OHIO
DEPARTMENT OF PUBLIC SERVICE
DIVISION OF DESIGN AND CONSTRUCTION

STD DWG
2202
04/30/18
SHT 4 OF 4

FOR USE ON A PARCEL WITH A SINGLE DWELLING

* REPLACEMENT OF EXISTING DRIVES SHALL MATCH PAVEMENT (TYPE, DESIGN) IN KIND TO EXISTING DRIVE. NEW DRIVES SHALL BE PAVEMENT (TYPE, DESIGN) SIMILAR TO MAIN ROADWAY (TYPE, DESIGN).

DRIVE PAVEMENT (TYPE, FLEXIBLE)

ITEM 441 - 1.5" ASPHALT CONCRETE, SURFACE COURSE, (TYPE 1), PG 64-22

ITEM 441 - 2.5" ASPHALT CONCRETE, INTERMEDIATE COURSE, (TYPE 2), PG 64-22

ITEM 304 - 4" AGGREGATE BASE

** SIDEWALK SHALL BE PER STANDARD DRAWING 2300. SIDEWALK THICKNESS SHALL BE 6" CONCRETE TO ONE FULL PANEL (MIN. 5 FT.) BEYOND EDGE OF DRIVE.

PAR = PEDESTRIAN ACCESS ROUTE. SET PAR THROUGH APPROACH AT SIDEWALK GRADE TO AVOID RAMP OR TRANSITION. IF NOT POSSIBLE, THEN MINIMIZE TRANSITION FROM SIDEWALK TO APPROACH.

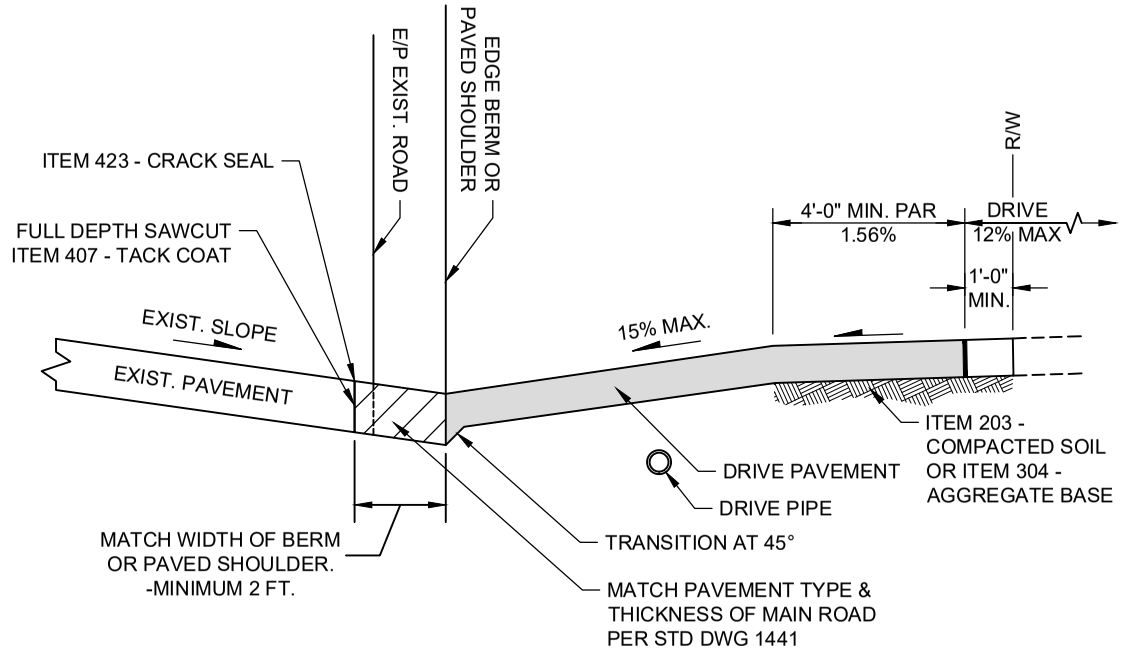

SECTION A-A

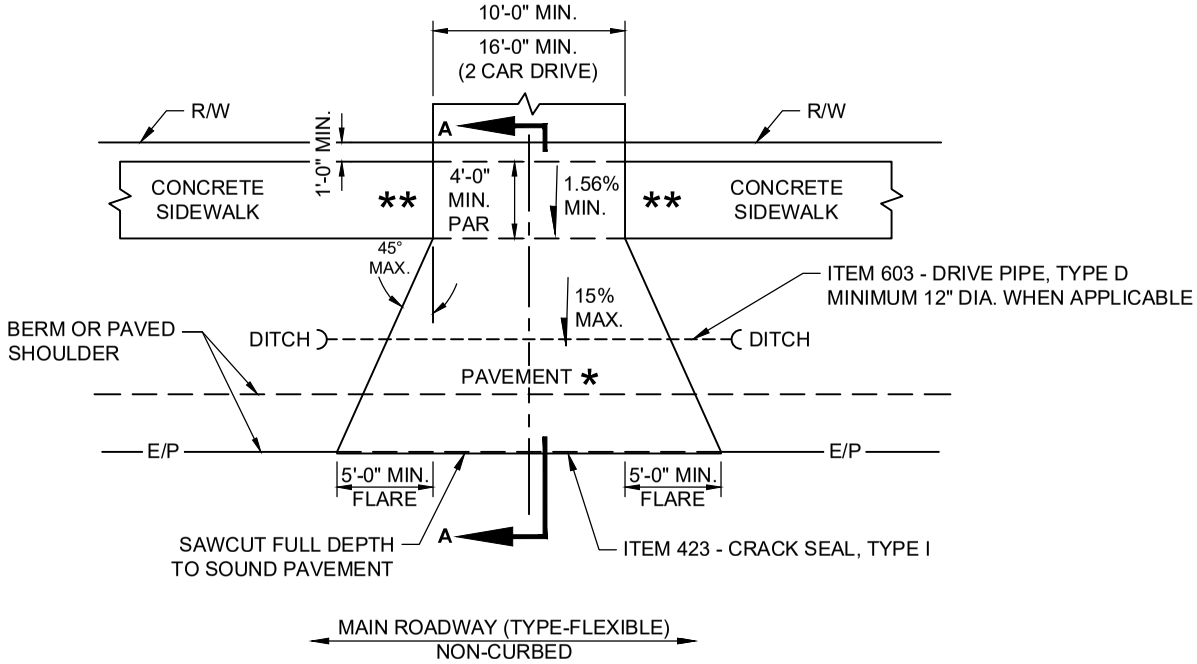

DRIVE PAVEMENT (TYPE, FLEXIBLE)

DRIVEWAY, RESIDENTIAL NON-CURBED ROADWAY

CITY OF COLUMBUS, OHIO
DEPARTMENT OF PUBLIC SERVICE
DIVISION OF DESIGN AND CONSTRUCTION

STD DWG 2206

04/30/18

SHT 1 OF 3

CITY ENGINEER

FOR USE ON A PARCEL WITH A SINGLE DWELLING

* REPLACEMENT OF EXISTING DRIVES SHALL MATCH PAVEMENT (TYPE, DESIGN) IN KIND TO EXISTING DRIVE. NEW DRIVES SHALL BE PAVEMENT (TYPE, DESIGN) SIMILAR TO MAIN ROADWAY (TYPE, DESIGN).

DRIVE PAVEMENT (TYPE, RIGID)
ITEM 452 - 6" NON-REINFORCED PORTLAND CEMENT CONCRETE

** SIDEWALK SHALL BE PER STANDARD DRAWING 2300. SIDEWALK THICKNESS SHALL BE 6" CONCRETE TO ONE FULL PANEL (MIN. 5 FT.) BEYOND EDGE OF DRIVE.

PAR = PEDESTRIAN ACCESS ROUTE. SET PAR THROUGH APPROACH AT SIDEWALK GRADE TO AVOID RAMP OR TRANSITION. IF NOT POSSIBLE, THEN MINIMIZE TRANSITION FROM SIDEWALK TO APPROACH.

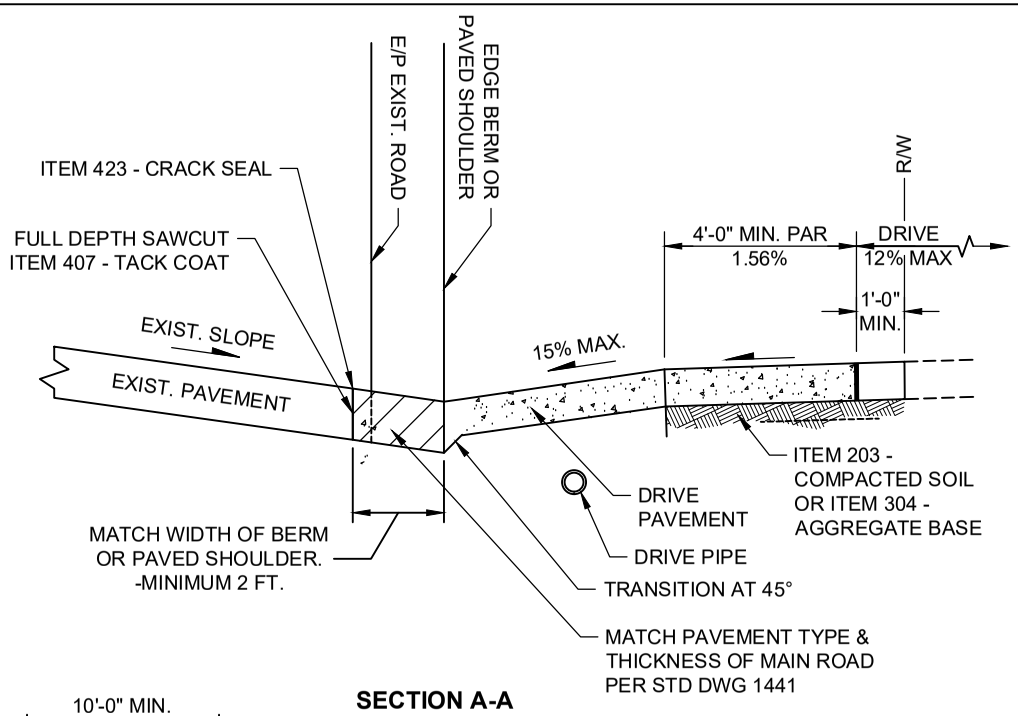

SECTION A-A

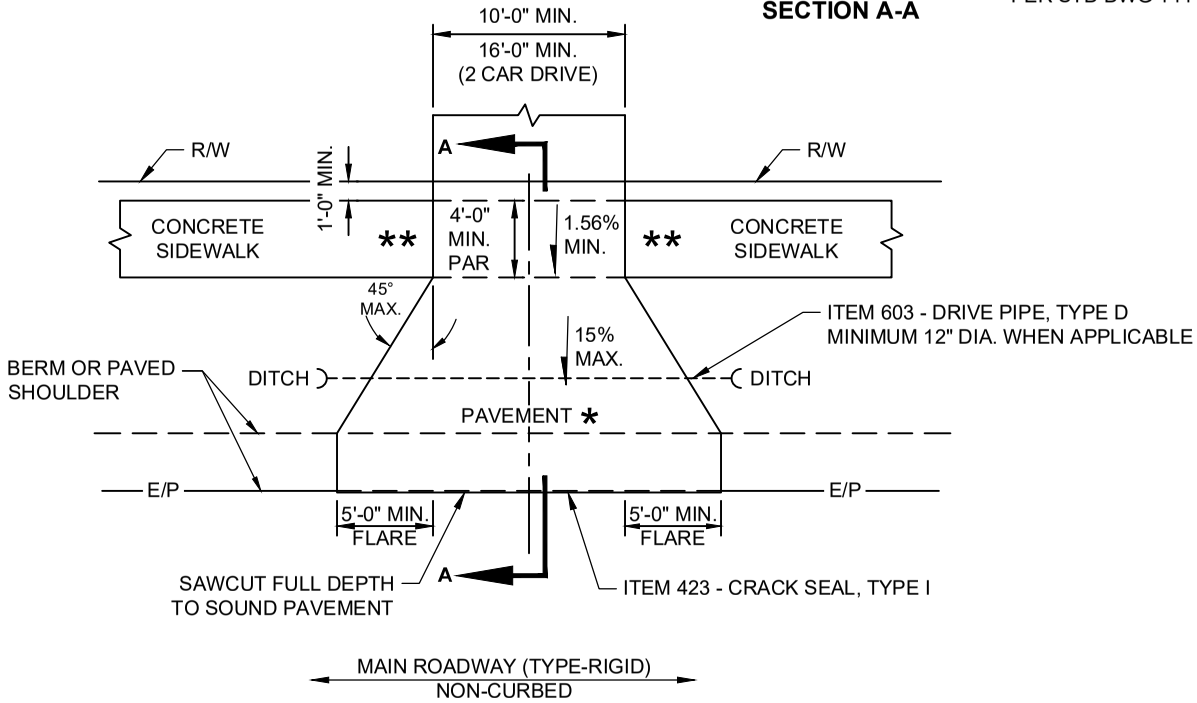

DRIVE PAVEMENT (TYPE, RIGID)

DRIVEWAY, RESIDENTIAL NON-CURBED ROADWAY

CITY OF COLUMBUS, OHIO
DEPARTMENT OF PUBLIC SERVICE
DIVISION OF DESIGN AND CONSTRUCTION

STD DWG
2206
04/30/18
SHT 2 OF 3

FOR USE ON A NON-RESIDENTIAL PARCEL

* REPLACEMENT OF EXISTING DRIVES SHALL MATCH PAVEMENT (TYPE, DESIGN) IN KIND TO EXISTING DRIVE. NEW DRIVES SHALL BE PAVEMENT (TYPE, DESIGN) SIMILAR TO MAIN ROADWAY (TYPE, DESIGN).

DRIVE PAVEMENT (TYPE, RIGID)
ITEM 452 - 8" NON-REINFORCED PORTLAND CEMENT CONCRETE

** SIDEWALK SHALL BE PER STANDARD DRAWING 2300. SIDEWALK THICKNESS SHALL BE 8" CONCRETE TO ONE FULL PANEL (MIN. 5 FT.) BEYOND EDGE OF DRIVE.

PAR = PEDESTRIAN ACCESS ROUTE. SET PAR THROUGH APPROACH AT SIDEWALK GRADE TO AVOID RAMP OR TRANSITION. IF NOT POSSIBLE, THEN MINIMIZE TRANSITION FROM SIDEWALK TO APPROACH.

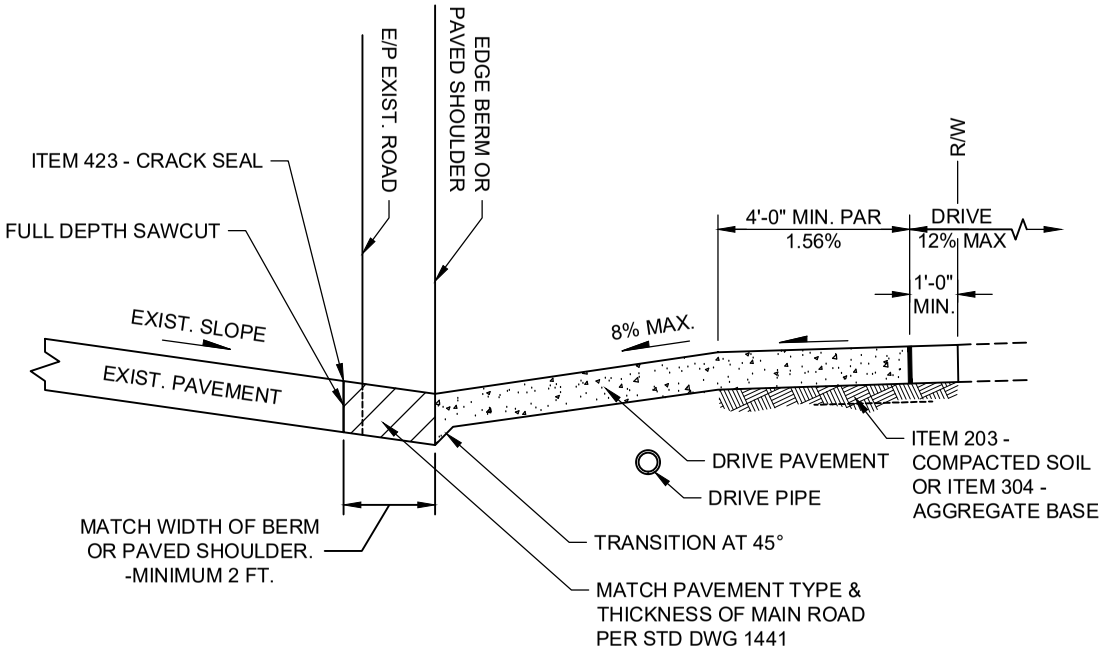

SECTION A-A

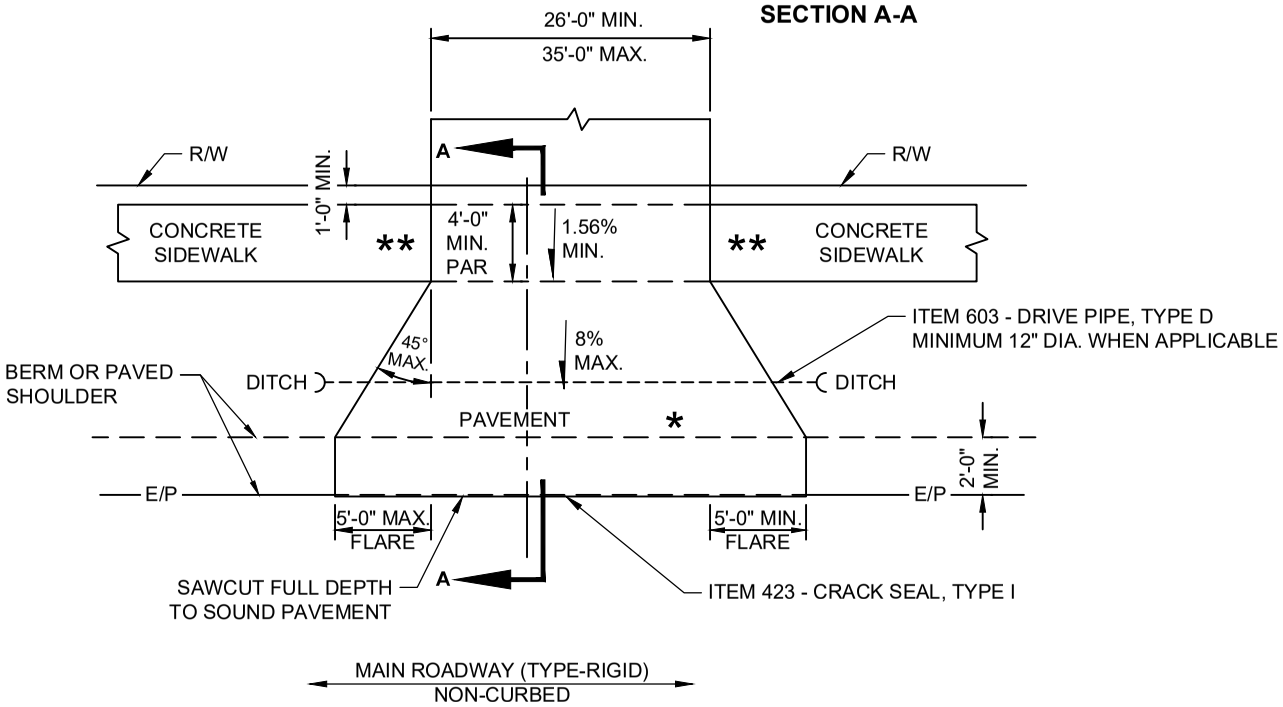

DRIVE PAVEMENT (TYPE, RIGID)

DRIVEWAY, NON-RESIDENTIAL NON-CURBED ROADWAY

CITY OF COLUMBUS, OHIO
DEPARTMENT OF PUBLIC SERVICE
DIVISION OF DESIGN AND CONSTRUCTION

STD DWG
2206
04/30/18
SHT 3 OF 3

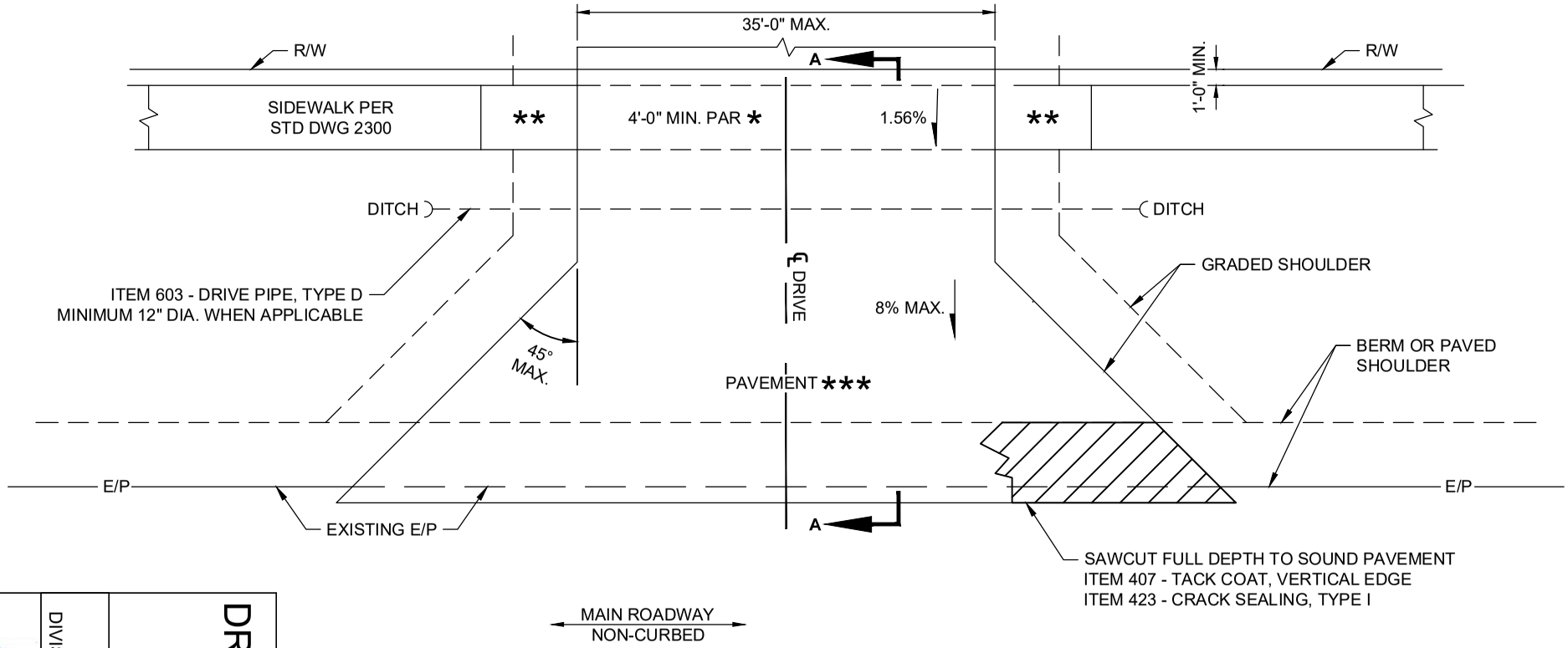

DO NOT REPLACE PAVED SHOULDER IF SHOULDER HAS EQUAL OR GREATER PAVEMENT BUILD-UP.

* PAR = PEDESTRIAN ACCESS ROUTE. SET PAR THROUGH APPROACH AT SIDEWALK GRADE TO AVOID RAMP OR TRANSITION. IF NOT POSSIBLE, THEN MINIMIZE TRANSITION FROM SIDEWALK TO APPROACH.

** 8" THICK CONCRETE SIDEWALK FOR 1 FULL PANEL (MIN. 5 FT.) BEYOND EDGE OF DRIVE.

*** DRIVE PAVEMENT (FLEXIBLE DESIGN)
ITEM 441 - 1.5" ASPHALT CONCRETE, SURFACE COURSE, (TYPE 1), PG 64-22
ITEM 441 - 6.5" ASPHALT CONCRETE, INTERMEDIATE COURSE, (TYPE 2), PG 64-22 (MULTIPLE LIFTS)
ITEM 304 - 4" AGGREGATE BASE

DRIVEWAY, NON-RESIDENTIAL WITH FLARES NON-CURBED ROADWAY

CITY OF COLUMBUS, OHIO
DEPARTMENT OF PUBLIC SERVICE
DIVISION OF DESIGN AND CONSTRUCTION

STD DWG
2207

04/30/18

SHT 1 OF 2

CITY ENGINEER

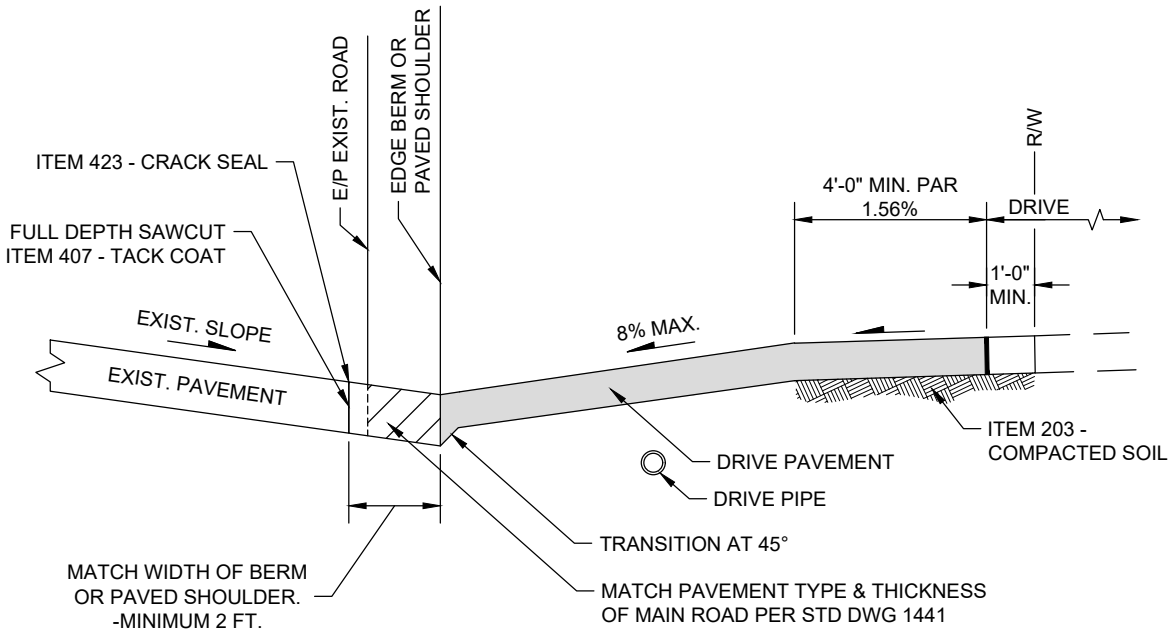

SECTION A-A

DRIVEWAY, NON-RESIDENTIAL WITH FLARES NON-CURBED ROADWAY

CITY OF COLUMBUS, OHIO
DEPARTMENT OF PUBLIC SERVICE
DIVISION OF DESIGN AND CONSTRUCTION

STD DWG
2207

04/30/18

SHT 2 OF 2

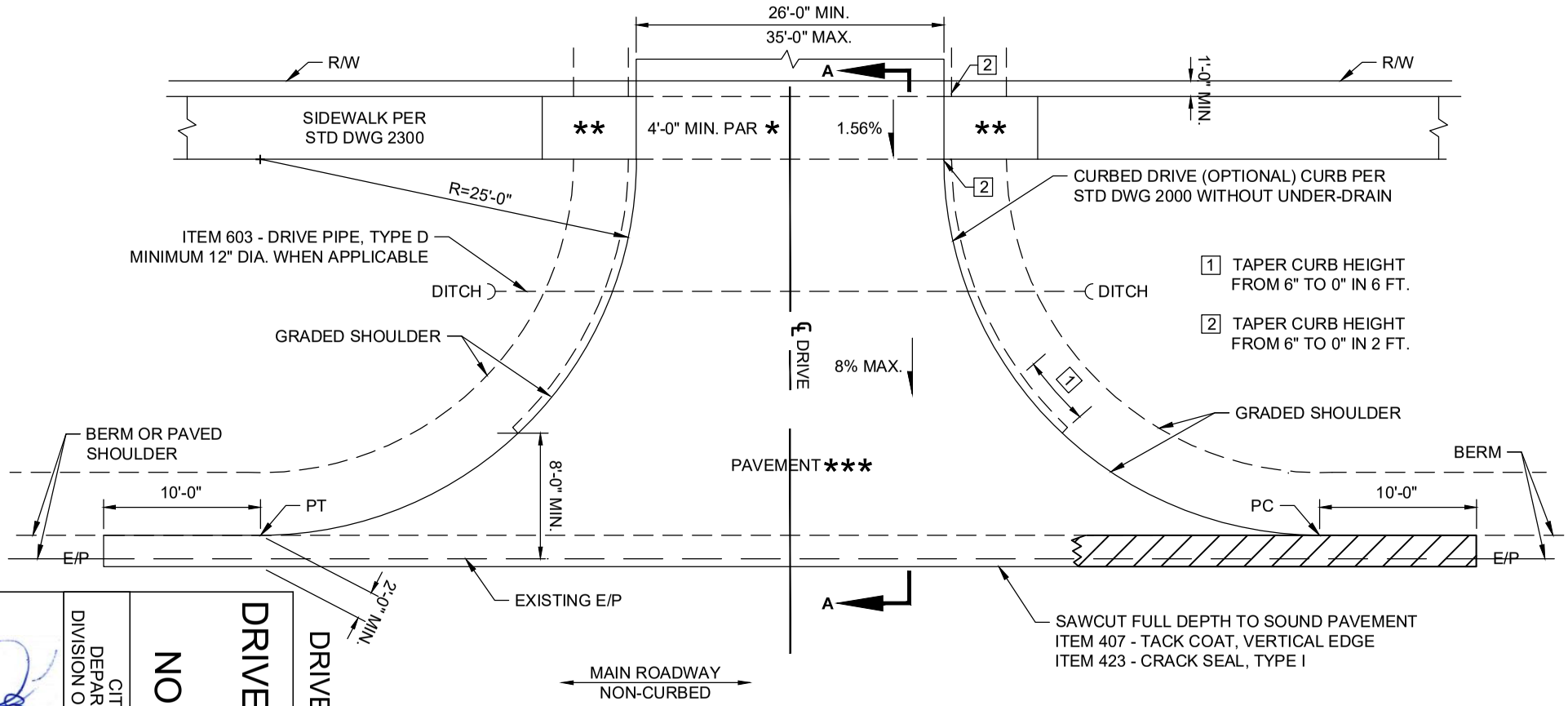

DO NOT REPLACE PAVED SHOULDER IF SHOULDER HAS EQUAL OR GREATER PAVEMENT BUILD-UP.

* PAR = PEDESTRIAN ACCESS ROUTE. SET PAR THROUGH APPROACH AT SIDEWALK GRADE TO AVOID RAMP OR TRANSITION. IF NOT POSSIBLE, THEN MINIMIZE TRANSITION FROM SIDEWALK TO APPROACH.

** 8" THICK CONCRETE SIDEWALK FOR 1 FULL PANEL (MIN. 5 FT.) BEYOND EDGE OF DRIVE.

*** DRIVE PAVEMENT (FLEXIBLE DESIGN)
ITEM 441 - 1.5" ASPHALT CONCRETE, SURFACE COURSE, (TYPE 1), PG 64-22
ITEM 441 - 6.5" ASPHALT CONCRETE, INTERMEDIATE COURSE, (TYPE 2), PG 64-22 (MULTIPLE LIFTS)
ITEM 304 - 4" AGGREGATE BASE

DRIVE PAVEMENT (TYPE, FLEXIBLE)

DRIVEWAY, NON-RESIDENTIAL WITH RADIUS NON-CURBED ROADWAY

CITY OF COLUMBUS, OHIO
DEPARTMENT OF PUBLIC SERVICE
DIVISION OF DESIGN AND CONSTRUCTION

CITY ENGINEER

STD DWG
2208

04/30/18

SHT 1 OF 4

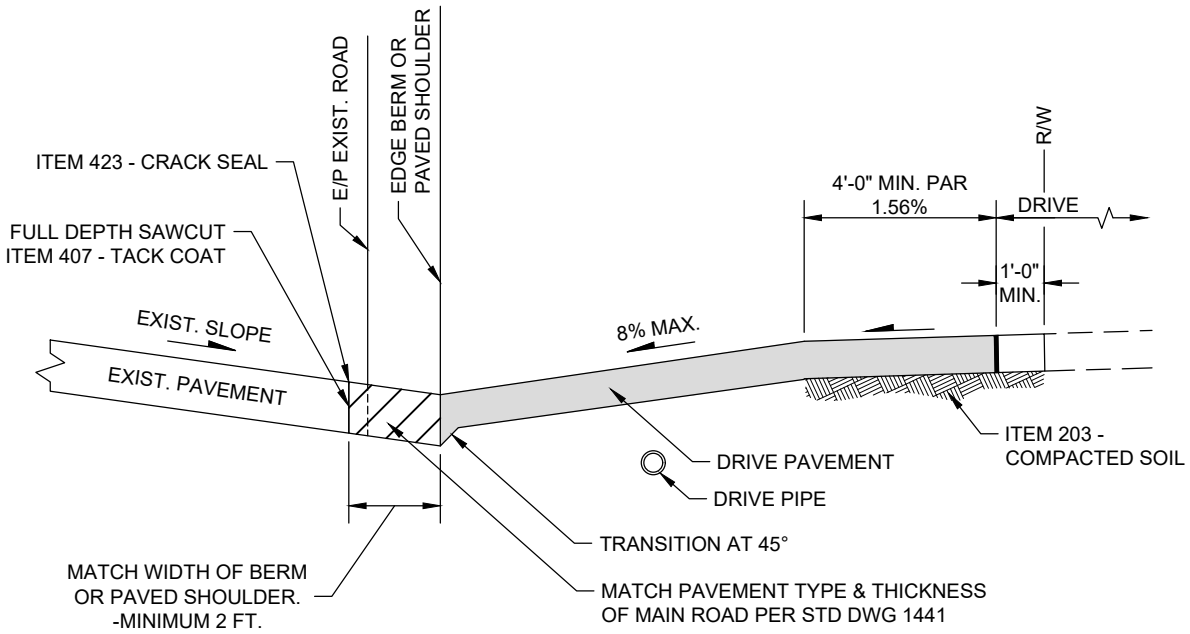

SECTION A-A

DRIVE PAVEMENT (TYPE, FLEXIBLE)

DRIVEWAY, NON-RESIDENTIAL WITH RADIUS NON-CURBED ROADWAY

CITY OF COLUMBUS, OHIO
DEPARTMENT OF PUBLIC SERVICE
DIVISION OF DESIGN AND CONSTRUCTION

STD DWG
2208

04/30/18

SHT 2 OF 4

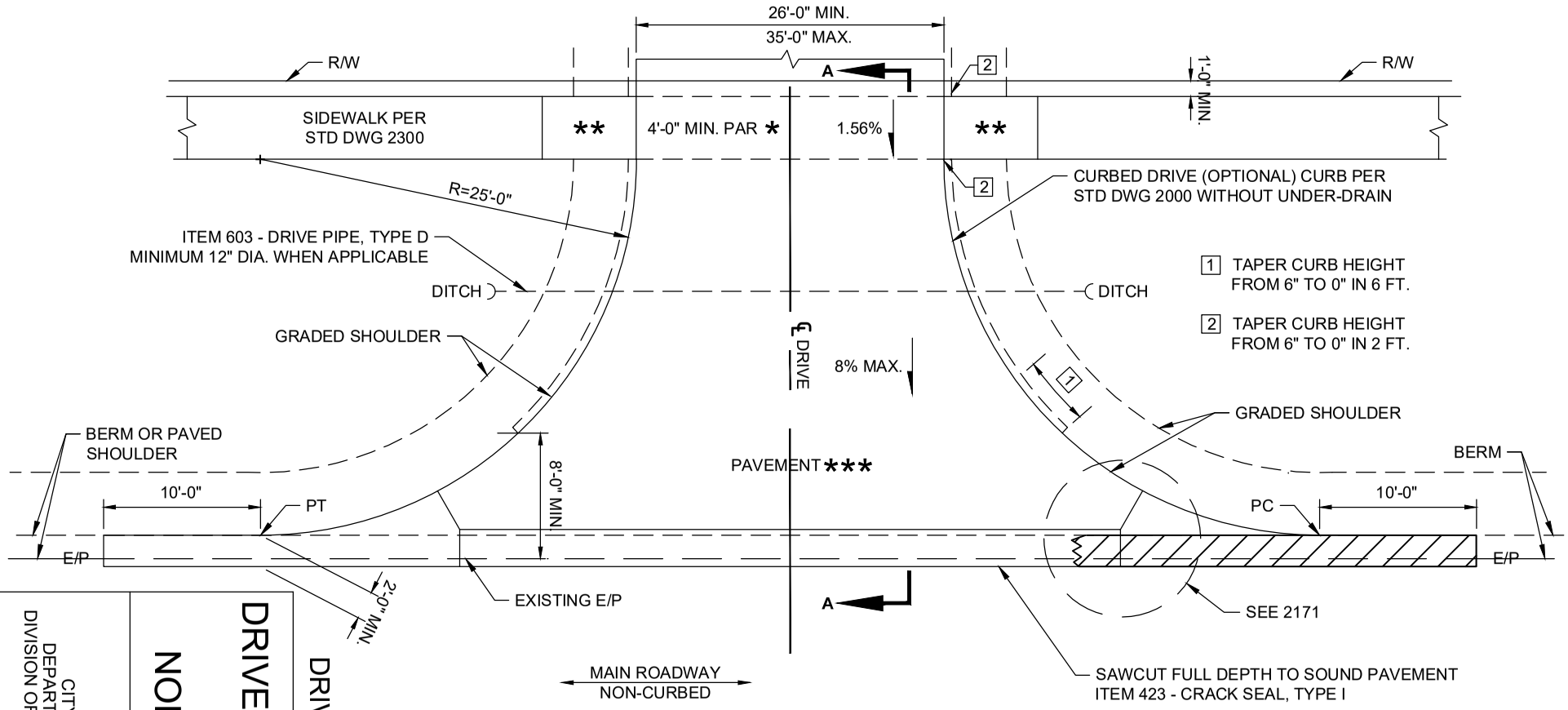

DO NOT REPLACE PAVED SHOULDER IF SHOULDER HAS EQUAL OR GREATER PAVEMENT BUILD-UP.

* PAR = PEDESTRIAN ACCESS ROUTE. SET PAR THROUGH APPROACH AT SIDEWALK GRADE TO AVOID RAMP OR TRANSITION. IF NOT POSSIBLE, THEN MINIMIZE TRANSITION FROM SIDEWALK TO APPROACH.

** 8" THICK CONCRETE SIDEWALK FOR 1 FULL PANEL (MIN. 5 FT.) BEYOND EDGE OF DRIVE.

*** DRIVE PAVEMENT (RIGID DESIGN)
ITEM 452 - 8" NON-REINFORCED PORTLAND CEMENT CONCRETE.

DRIVE PAVEMENT (TYPE, RIGID)

DRIVEWAY, NON-RESIDENTIAL WITH RADIUS NON-CURBED ROADWAY

CITY OF COLUMBUS, OHIO
DEPARTMENT OF PUBLIC SERVICE
DIVISION OF DESIGN AND CONSTRUCTION

STD DWG
2208

04/30/18

SHT 3 OF 4

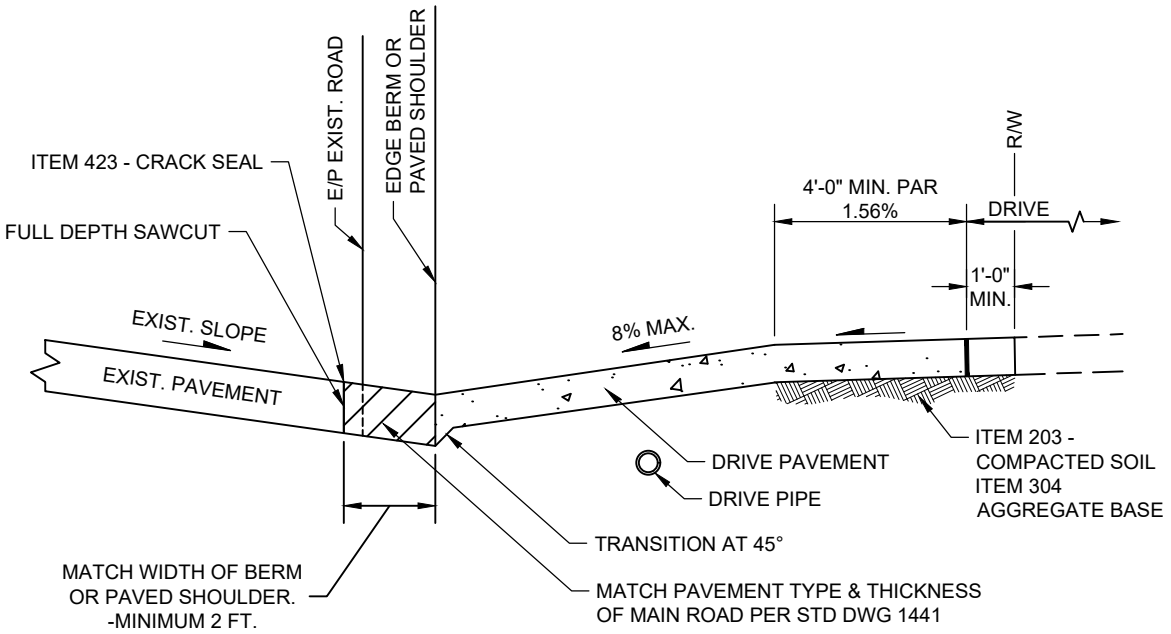

SECTION A-A

DRIVE PAVEMENT (TYPE, RIGID)

DRIVEWAY, NON-RESIDENTIAL WITH RADIUS NON-CURBED ROADWAY

CITY OF COLUMBUS, OHIO
DEPARTMENT OF PUBLIC SERVICE
DIVISION OF DESIGN AND CONSTRUCTION

STD DWG
2208

04/30/18

SHT 4 OF 4

NOTES:

1. SHIPPING WEIGHT OF RECEPTACLE SHALL BE 280 LBS, MIN.
2. RECEPTACLE SHALL HAVE SIDE DOOR ACCESS. USE OIL IMPREGNATED BRONZE BUSHINGS AND STAINLESS STEEL PIVOT PINS FOR DOOR MOVEMENT, WITH 3/16" SOLID STEEL LATCH ASSEMBLY (NO LOCK).
3. ALL FABRICATED METAL COMPONENTS SHALL BE STEEL SHOTBLASTED, ETCHED, PHOSPHATIZED, PREHEATED, AND ELECTROSTATICALLY POWDER-COATED WITH T.G.I.C. POLYESTER POWDER COATINGS, 8-10 MILS THICK. ALL PARTS SHALL BE BLACK POWDER COATED.
4. RECEPTACLES SHALL NOT BE INSTALLED NEXT TO ON-STREET PARKING.
5. LINER SHALL BE BLACK HIGH-DENSITY POLYETHYLENE PLASTIC. PLASTIC LINER REINFORCED, RIBBED AND MOLDED FOR LONGER LIFE, MINIMUM HEIGHT 26-3/4" - MAXIMUM 27-1/4", DIAMETER MINIMUM 21-1/2" - MAXIMUM 21-3/4".

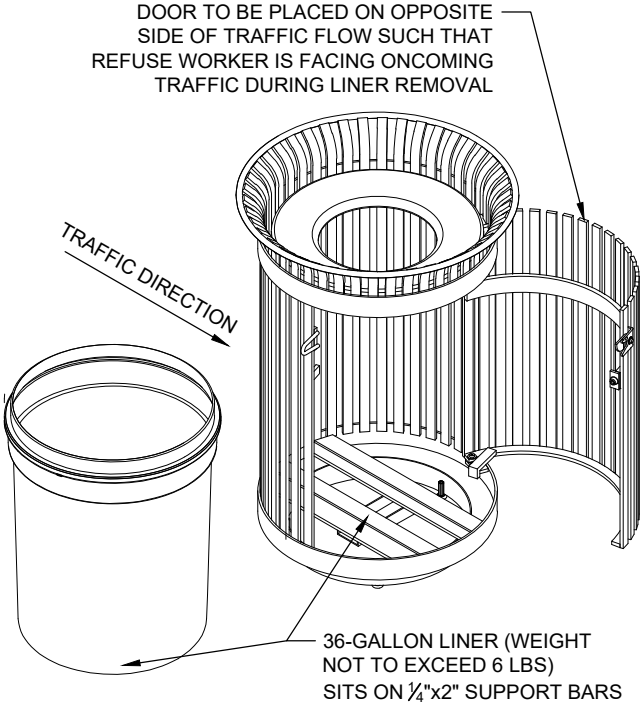

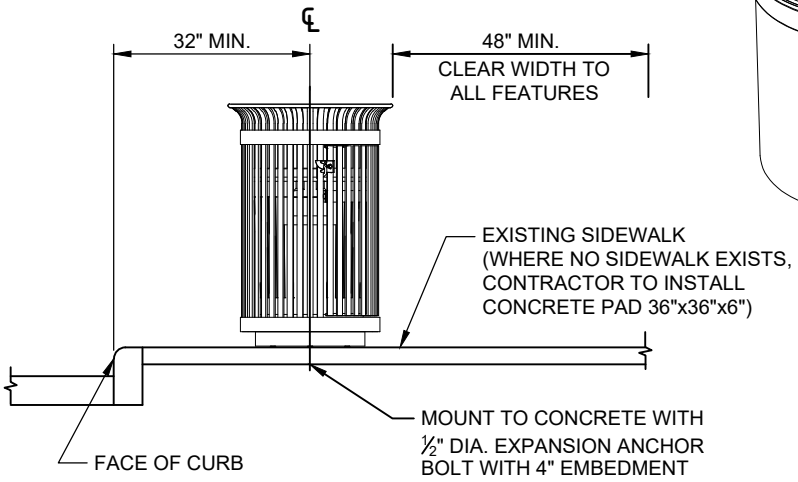

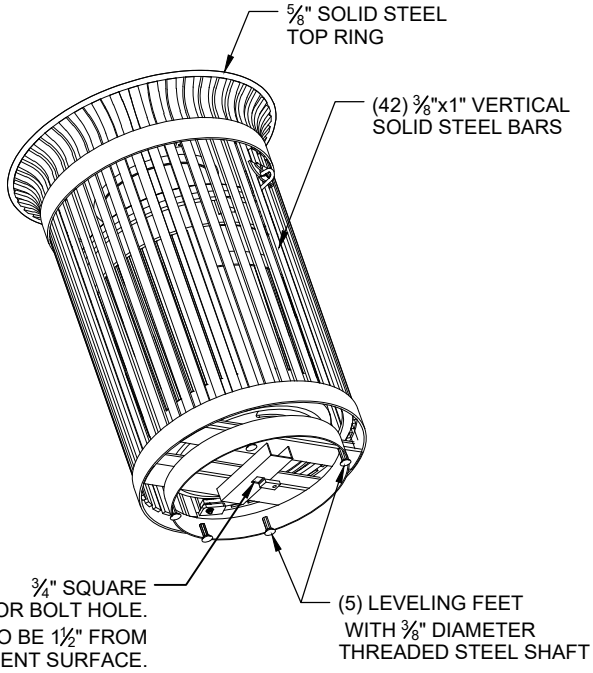

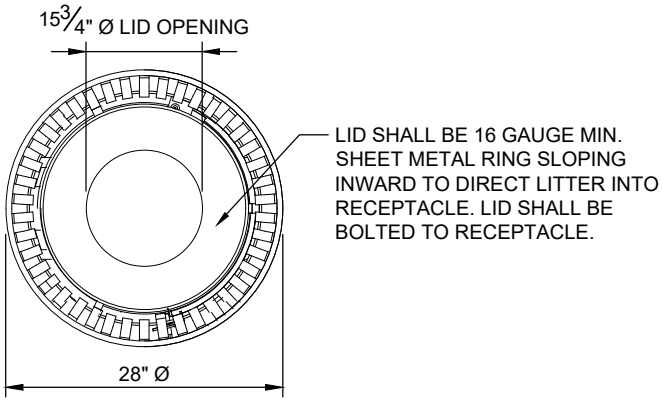

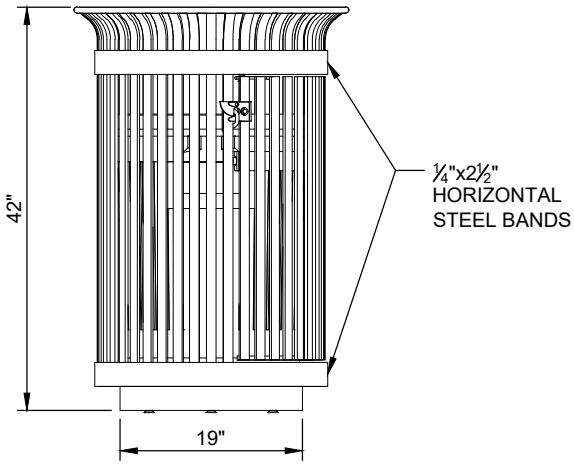

LITTER RECEPTACLE
36 GALLON CAPACITY

CITY OF COLUMBUS, OHIO DEPARTMENT OF PUBLIC SERVICE DIVISION OF DESIGN AND CONSTRUCTION	STD DWG 2400
	4/30/2018
CITY ENGINEER	SHT 1 OF 1