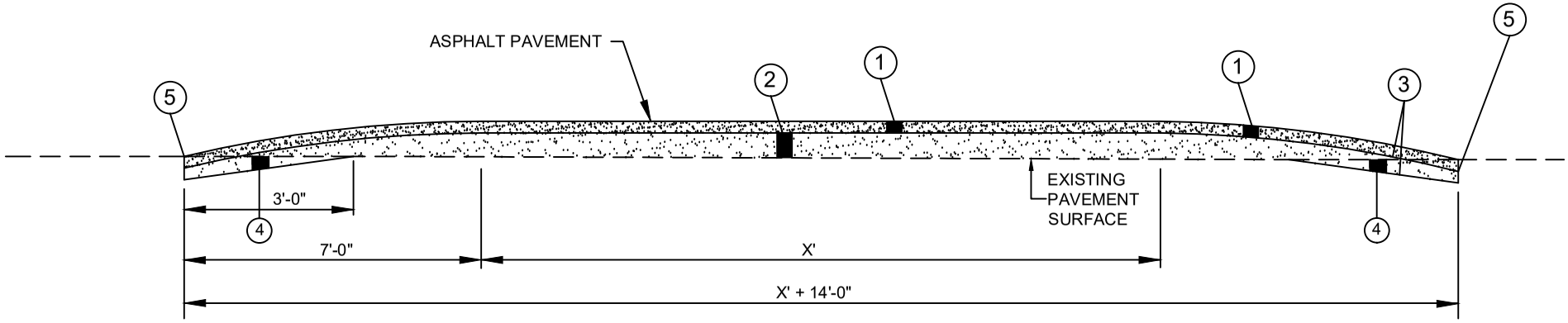

1. ITEM 441 - 1 ½" ASPHALT CONCRETE, SURFACE COURSE (TYPE 1), PG64-22
2. ITEM 441 - VAR. ASPHALT CONCRETE, INTERMEDIATE COURSE (TYPE 2)
3. ITEM 407 - TACK COAT
4. BUTT JOINT
5. WORK SPECIFIED UNDER ITEM 423 - CRACK SEALING, TYPE I

THE TEMPERATURE FOR ITEM 441 - ASPHALT CONCRETE, INTERMEDIATE COURSE SHALL BE < 150° F BEFORE ITEM 441 - ASPHALT CONCRETE, SURFACE COURSE CAN BE PLACED.

X = VARIES ACCORDING TO STREET WIDTH.

ITEM SPECIAL: INTERSECTION SPEED TABLE (EACH)

CROSS - SECTION

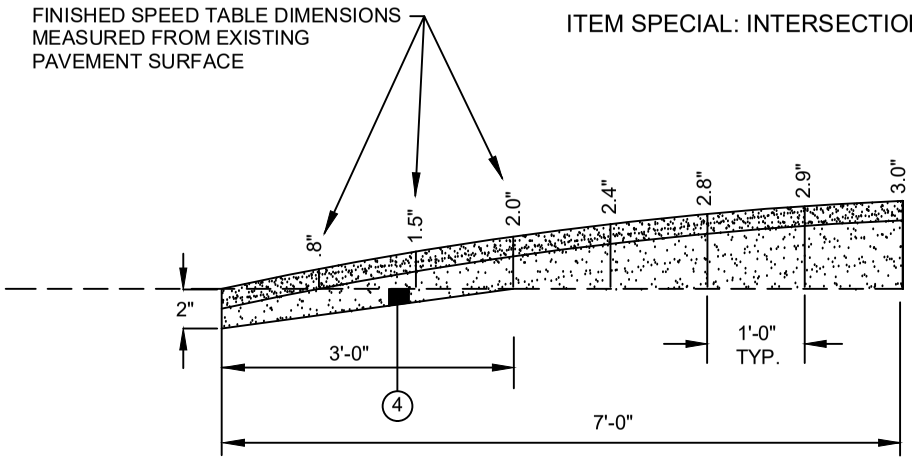

INTERSECTION SPEED TABLE

CITY OF COLUMBUS, OHIO
DEPARTMENT OF PUBLIC SERVICE
DIVISION OF DESIGN AND CONSTRUCTION

CITY ENGINEER

STD DWG
2337

07/01/2021

SHT 1 OF 2

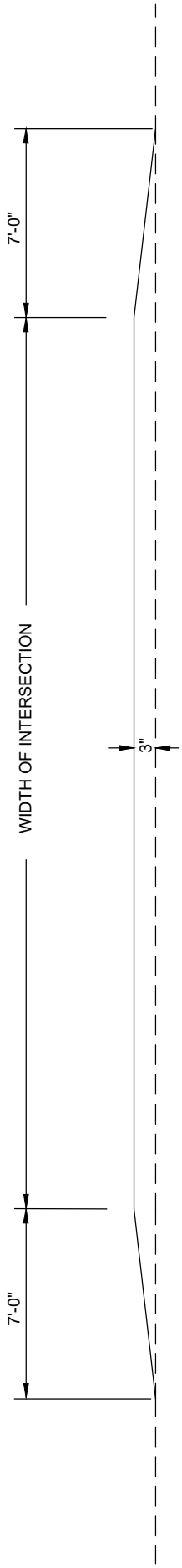

FOUR - LEG INTERSECTION

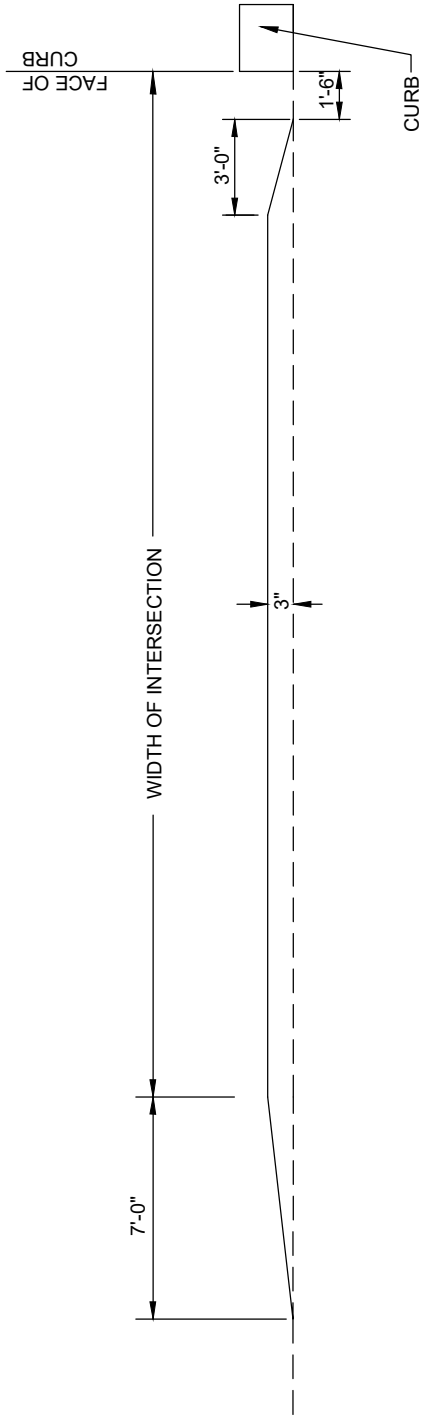

THREE - LEG INTERSECTION

ROADWAY CROSS - SECTION

INTERSECTION SPEED TABLE

CITY OF COLUMBUS, OHIO
DEPARTMENT OF PUBLIC SERVICE
DIVISION OF DESIGN AND CONSTRUCTION

STD DWG
2337

07/01/2021

SHT 2 OF 2