A	B	LETTERS					C	D	E	F	G	H	R	BORDER	MARGIN	NUMBER OF POSTS	POSTS LENGTH
		1	2	3	4	5											
42"	30"	2-¼" D	3-½" C	4-¼" C	1-¼" C	1-⅛" C	2-½"	2-¼"	2"	1-½"	1"	1-¼"	1-½"	½"	½"	2	13'

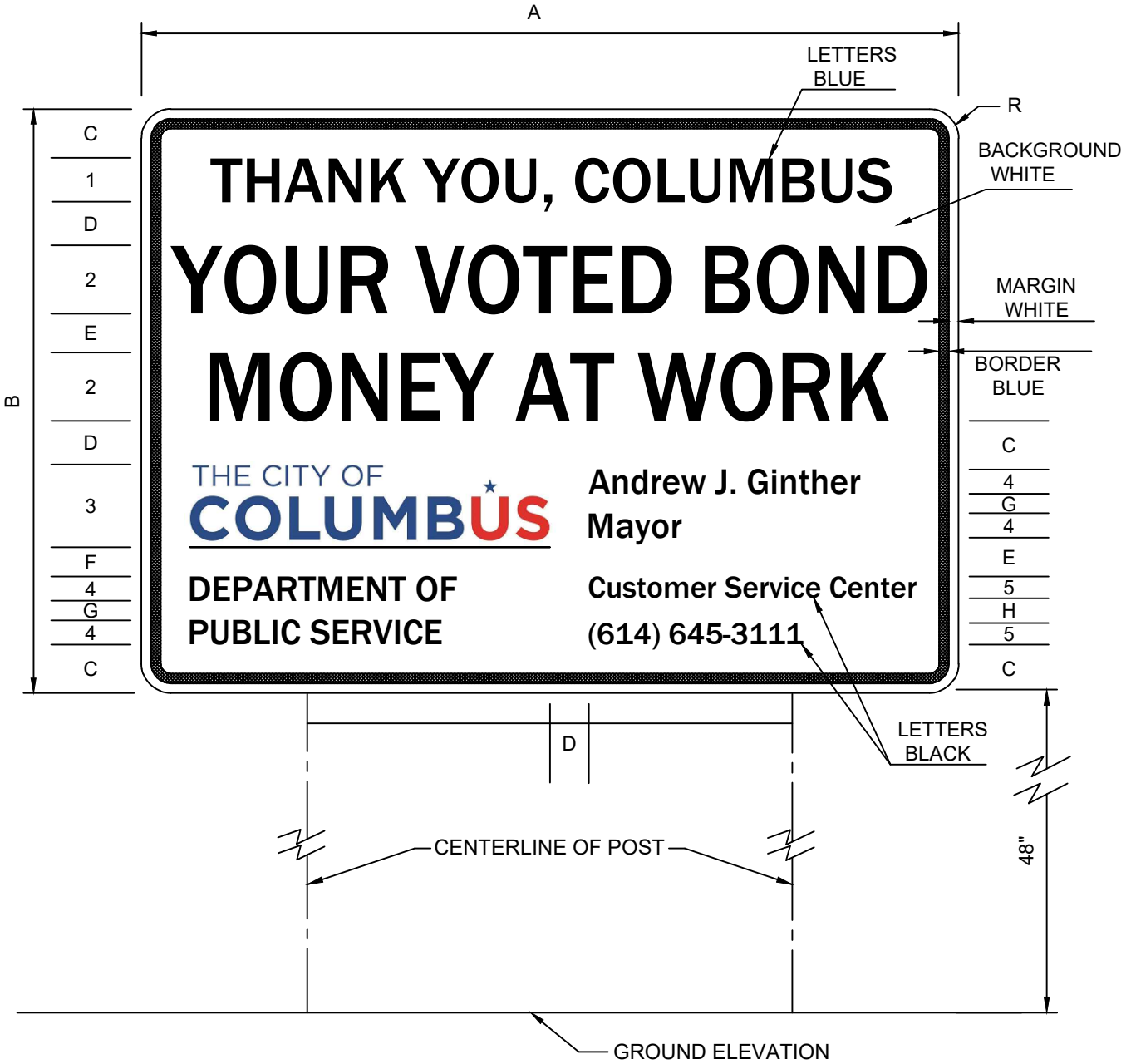

METAL SIGNS ARE TO BE MOUNTED ON 2 LB. POSTS.
WOOD SIGNS ARE TO BE MOUNTED ON TWO 4"x4" POSTS.
WOOD SIGNS MAY HAVE SQUARE CORNERS.

YOUR BOND MONEY AT WORK SIGN

CITY OF COLUMBUS, OHIO
DEPARTMENT OF PUBLIC SERVICE
DIVISION OF DESIGN AND CONSTRUCTION

CITY ENGINEER

STD DWG
1440

3/30/2018

SHT 1 OF 1

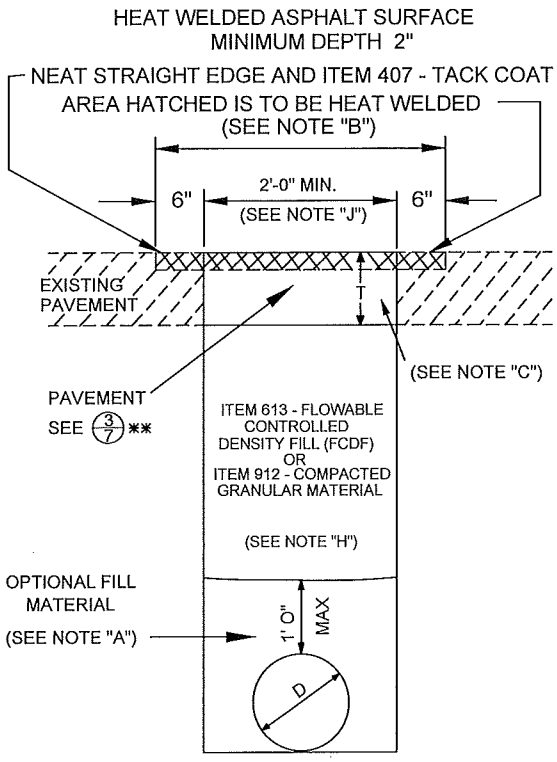

TYPE I

STANDARD FLEXIBLE ASPHALT REPAIR WITH HEATWELD SURFACE (SEE NOTE "B")

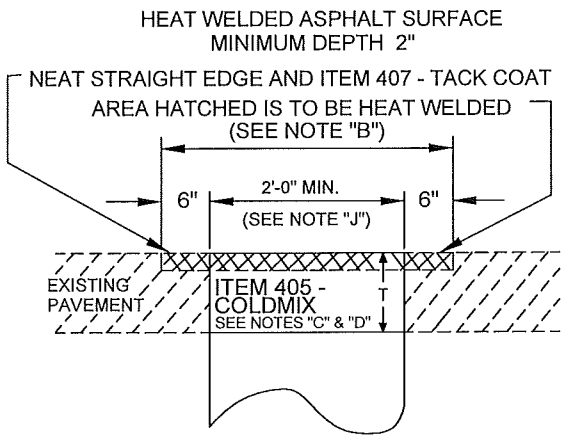

TYPE II

WINTER OPERATIONS FLEXIBLE ASPHALT REPAIR WITH HEATWELD SURFACE (SEE NOTE "E")

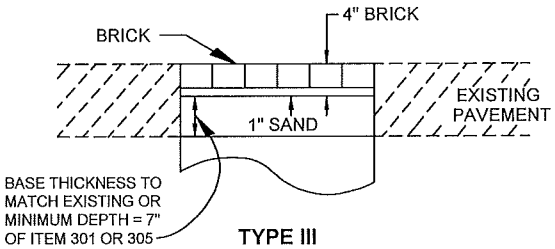

TYPE III

BRICK STREET REPAIR (SEE NOTE "F")

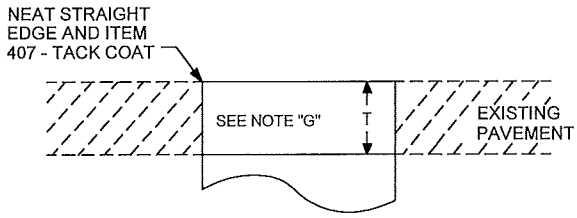

TYPE IV

ALLEY REPAIR

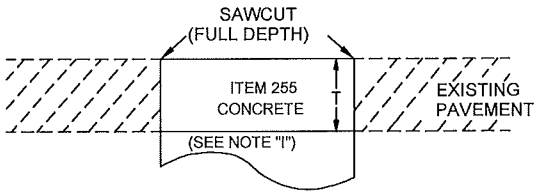

TYPE V

CONCRETE STREET REPAIR OR CONCRETE BUS PAD

BACKFILL FOR ALL TYPES SHALL MEET THE REQUIREMENTS SHOWN IN TYPE I ABOVE.

T: MATCH EXISTING PAVEMENT THICKNESS, HOWEVER, MINIMUM OF 10" ON ALL STREET CUTS AND 6" ON ALL ALLEYS.

PAVEMENT & UTILITY CUT REPAIR STANDARDS

CITY OF COLUMBUS, OHIO
DEPARTMENT OF PUBLIC SERVICE
DIVISION OF DESIGN AND CONSTRUCTION

STD DWG
1441

12/1/13

CITY ENGINEER

SHT 1 OF 7

SIDEWALK AND CURB REPAIR DETAILS

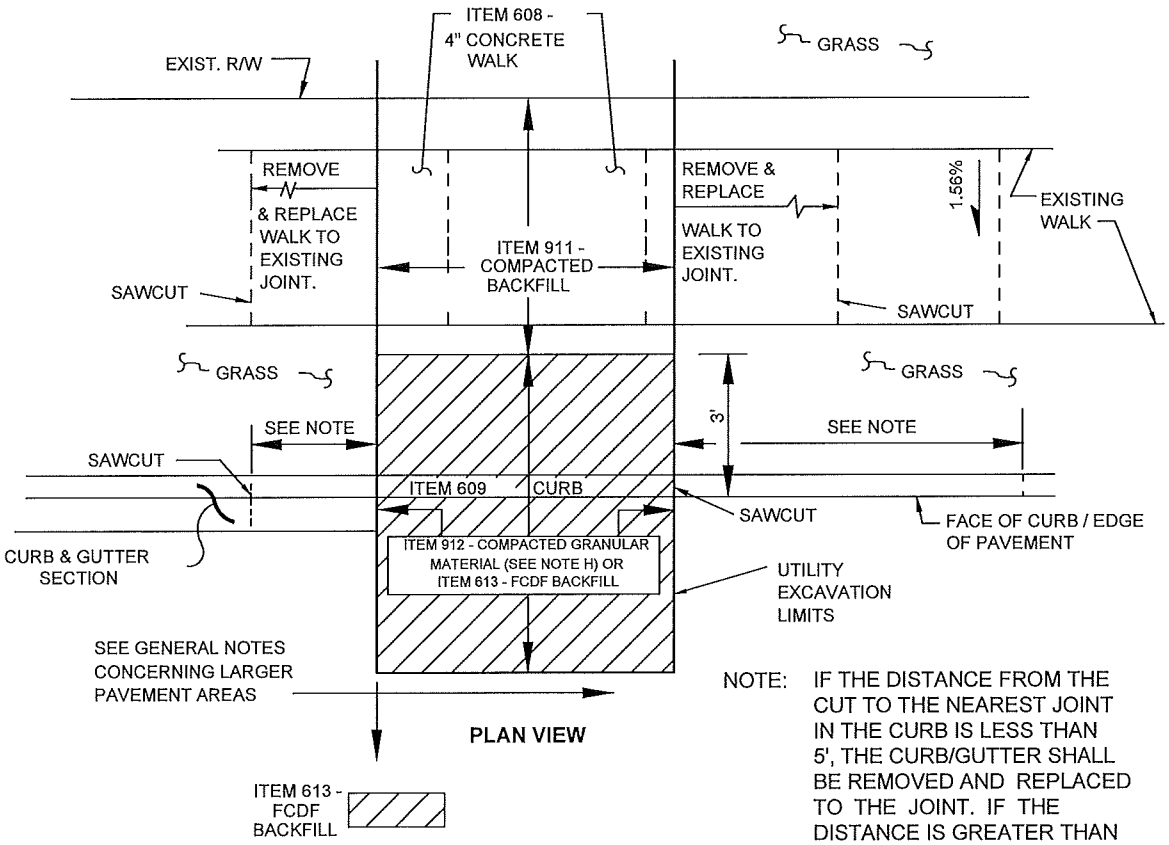

NOTE: IF THE DISTANCE FROM THE CUT TO THE NEAREST JOINT IN THE CURB IS LESS THAN 5', THE CURB/GUTTER SHALL BE REMOVED AND REPLACED TO THE JOINT. IF THE DISTANCE IS GREATER THAN 5', THE CURB MAY REMAIN.

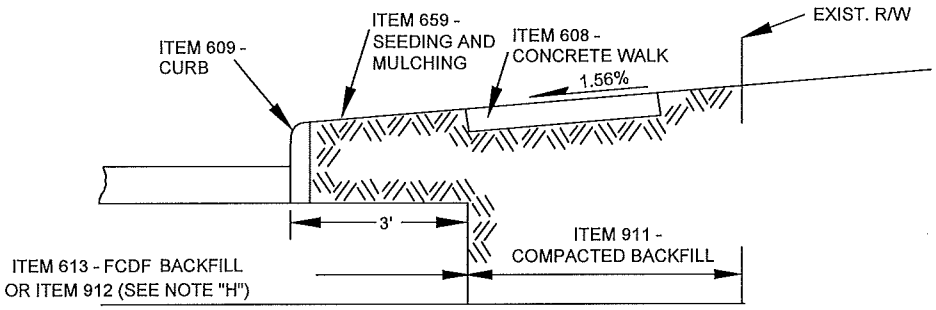

BOTTOM OF EXCAVATION

ALL GRASS AREAS SHALL BE SEEDED IN ACCORDANCE WITH ITEM 659 - SEEDING AND MULCHING.

PAVEMENT & UTILITY CUT REPAIR STANDARDS

CITY OF COLUMBUS, OHIO
DEPARTMENT OF PUBLIC SERVICE
DIVISION OF DESIGN AND CONSTRUCTION

STD DWG
1441
12/1/13
SHT 2 OF 7

GENERAL NOTES

EXCAVATION PERMIT REQUIRED: A CITY OF COLUMBUS STREET EXCAVATION PERMIT IS REQUIRED FOR ALL EXCAVATIONS WITHIN THE PUBLIC RIGHT-OF-WAY, AS SET FORTH BY COLUMBUS CITY CODE, CHAPTER 903 AND ISSUED IN ACCORDANCE WITH PROVISIONS IN THE GENERAL RULES AND REGULATIONS OF THE DEPARTMENT OF PUBLIC SERVICE.

SCOPE OF WORK

THIS WORK SHALL CONSIST OF PAVEMENT REMOVAL, NECESSARY EXCAVATION, AND PAVEMENT REPLACEMENT IN ACCORDANCE WITH THE DETAILS SHOWN HEREIN. ALL WORK AND MATERIALS SHALL CONFORM TO THE REQUIREMENTS OF THE CURRENT CITY OF COLUMBUS CONSTRUCTION AND MATERIALS SPECIFICATION (CMSC).

PROCEDURES USED FOR THE PAVEMENT REMOVAL AND REPLACEMENT SHALL NOT CAUSE SPALLING OR CRACKING OF ADJACENT PAVEMENT.

WHEN THE PAVEMENT IS REMOVED AND THE CONTRACTOR IS UNABLE TO COMPLETE THE REQUIRED REPLACEMENT IN TIME FOR IT TO BE OPENED TO TRAFFIC AS INDICATED ON THE PERMIT, THE EXCAVATION SHALL BE FILLED WITH A BITUMINOUS PATCH MATERIAL WITH A DURABLE SURFACE OR PROPERLY PLATED. (AS PER CITY CODE CHAPTER 903 &/OR SHEET 7 OF THIS STANDARD DRAWING) THE CONTRACTOR WILL BE REQUIRED TO MAINTAIN THESE PATCHES WHILE THEY ARE IN SERVICE. THE COST OF PLACING, MAINTAINING, AND REMOVING AND DISPOSING OF THE TEMPORARY PATCHES OR PLATES WILL BE AT THE CONTRACTOR'S EXPENSE.

WHEN ITEM 613 FCDF IS USED AS A BACKFILL, NO PAVEMENT SHALL BE PLACED UNTIL BLEED WATER HAS BEEN EVAPORATED FROM THE FCDF SURFACE OR HAS BEEN DRAINED OR REMOVED FROM THE SURFACE. ITEM 613 FCDF IS NOT PERMITTED AS A TEMPORARY DRIVING SURFACE.

THE BACKFILLING PAVEMENT REPAIR AND/OR HEAT WELDING SHALL BE DONE BY THE CONTRACTOR OR PERMITEE IN ACCORDANCE WITH CITY SPECIFICATIONS. IF DESIRED, ANY OR ALL OF THIS WORK CAN BE PERFORMED BY THE CITY OF COLUMBUS. THE CITY SHALL COLLECT APPROPRIATE FEES AT THE TIME THE PERMIT IS ISSUED FOR SAID WORK.

RESTORATION OF ANY SIDEWALK, CURB, STREET PAVEMENT, ETC., SHALL OCCUR NO LATER THAN 30 DAYS AFTER CONCLUSION OF ANY UTILITY REPAIR OR INSTALLATION ACTIVITY. CONSTRUCTION ACTIVITY COMPLETED DECEMBER THROUGH APRIL SHALL BE RESOLVED NO LATER THAN MAY 31ST. ADDITIONAL PERMITS SHALL NOT BE ISSUED UNTIL THE VIOLATIONS ARE CORRECTED TO THE SATISFACTION OF THE DEPARTMENT OF PUBLIC SERVICE. IN ADDITION, EACH VIOLATION MAY BE DEALT WITH IN ACCORDANCE WITH SECTION 903.99 OF THE COLUMBUS CITY CODE.

** PAVING STANDARDS FOR LARGE TRENCHES OR PAVING AREAS

THE PAVEMENT REPAIR SECTION SHALL CONFORM TO 3 INCHES OF ITEM 448 ASPHALT CONCRETE ON EITHER 7 INCHES OF ITEM 301 ASPHALT CONCRETE BASE OR ITEM 305 PORTLAND CEMENT CONCRETE BASE.

PAVEMENT & UTILITY CUT REPAIR STANDARDS

CITY OF COLUMBUS, OHIO
DEPARTMENT OF PUBLIC SERVICE
DIVISION OF DESIGN AND CONSTRUCTION

STD DWG
1441
12/1/13
SHT 3 OF 7

WHEN A TRENCH EXCEEDS 100 FT IN LENGTH, THE REPAIR SHALL INCLUDE PLANING A FULL LANE WIDTH (OR ANY OTHER LANE WIDTH AS DIRECTED BY THE DEPARTMENT OF PUBLIC SERVICE) TO A DEPTH OF 1 ½ INCHES FOR THE ENTIRE LENGTH OF THE TRENCH. THE PLANED AREA SHALL THEN BE REPAVED WITH A PAVER IN ACCORDANCE WITH CURRENT CITY STANDARD SPECIFICATIONS. ITEM 423 - CRACK SEALING, TYPE 1 SHALL BE APPLIED TO EXPOSED JOINTS ONCE THE PAVING OPERATION HAS BEEN COMPLETED.

WHEN TRENCHING WORK CROSSES LANES, ALL AFFECTED LANES SHALL REQUIRE PLANING AND RESURFACING AS DESCRIBED ABOVE. THIS WORK SHALL INCLUDE ALL OF THE AFFECTED PAVEMENT AREA.

SPECIAL NOTES

NOTE 'A' : WHEN USING FLOWABLE CONTROLLED DENSITY FILL (FCDF), THE OPTIONAL FILL AREA OVER THE CONDUIT MAY BE BACKFILLED WITH SAND, GRANULAR MATERIAL, OR OTHER SUITABLE 912 MATERIAL, FOR A DISTANCE NOT TO EXCEED 1 FT. A PROTECTIVE BARRIER OF VISQUEEN OR SIMILAR MATERIAL IS PERMITTED.

NOTE 'B' : FOR TYPE I AND TYPE II CUT REPAIRS, THE AREA TO BE HEAT WELDED IS TO INCLUDE THE CUT AND EXTEND FOR 6 INCHES BEYOND EACH SIDE OF THE CUT FOR A NOMINAL DEPTH OF 2 INCHES.

NOTE 'C' : FOR TYPE I AND TYPE II PAVEMENT REPAIR, THE ITEM 448 HOT ASPHALT CONCRETE OR ITEM 405 COLD MIX SHALL BE PLACED IN LIFTS NOT EXCEEDING 3 INCHES AND COMPACTED WITH A COMBINATION VIBRATORY PLATE COMPACTOR, OR A VIBRATORY STEEL WHEELED ROLLER WITH A MINIMUM CERTIFIED FORCE OF 2000 POUNDS. IN ALL CASES THE SURFACE LIFT SHALL BE COMPACTED WITH THE VIBRATORY STEEL WHEELED ROLLER. WHEN PLACING ITEM 405 COLD MIX FULL DEPTH, MATERIAL TEMPERATURE SHALL BE 70 DEGREES OR ABOVE.

NOTE 'D' : COLD MIX SHALL BE ITEM 405 COLD MIX OR OTHER COLD MIX APPROVED BY THE CITY OF COLUMBUS. IN LIEU OF COLD MIX, THE CONTRACTOR MAY STOCKPILE ITEM 448 ASPHALT CONCRETE AND REHEAT IT TO PLACE IN CUT AS PAVEMENT REPAIR. TYPE II PAVEMENT REPLACEMENT SHALL CONSIST OF FULL DEPTH ITEM 405 COLD MIX FOR SMALL EXCAVATIONS. LARGE EXCAVATIONS SHALL REQUIRE A MINIMUM OF 7 INCHES OF FAST SETTING PORTLAND CEMENT AND 2 INCHES OF ITEM 405 COLD MIX.

NOTE 'E' : THE COLD MIX IS TO BE REPLACED WITH ITEM 448 ASPHALT CONCRETE WHICH IS TO BE HEAT WELDED AS SET FORTH IN NOTE 'B'. THIS WORK SHALL BE PERFORMED AS SOON AS ASPHALT IS AVAILABLE.

PAVEMENT & UTILITY CUT REPAIR STANDARDS

CITY OF COLUMBUS, OHIO
DEPARTMENT OF PUBLIC SERVICE
DIVISION OF DESIGN AND CONSTRUCTION

STD DWG
1441
12/1/13
SHT 4 OF 7

NOTE 'F' : REPAIR OF BRICK STREETS

1. BRICKS REMOVED FROM A REPAIR AREA SHALL BE STORED IN A SAFE PLACE BY THE CONTRACTOR FOR REUSE. THE CONTRACTOR WILL BE RESPONSIBLE FOR REPLACING ANY BRICKS THAT ARE STOLEN OR DAMAGED, AT NO ADDITIONAL COST TO THE CITY.

2. IF BRICKS ARE SUPPLIED BY THE CONTRACTOR, THEY MUST FIRST BE APPROVED BY THE CITY BEFORE THEY ARE USED.

3. SAW CUTTING: ALL PARTIAL BRICKS SHALL BE SAWCUT. FURTHER, NO BRICK WILL BE PERMITTED TO BE CUT, FOR REPLACEMENT, TO A LENGTH LESS THAN $\frac{1}{2}$ ITS ORIGINAL LENGTH. THIS MAY REQUIRE SAW CUTTING OF ADJACENT UNDISTURBED BRICK(S).

4. THE EXISTING BASE MATERIAL SHALL BE CUT BACK TO AS NEARLY VERTICAL AS POSSIBLE. IF SHEARING OF THE ADJACENT BASE RESULTS, THE CONTRACTOR SHALL REMOVE ADDITIONAL BASE MATERIAL UNTIL A VERTICAL FACE IS ACHIEVED.

5. THE MAXIMUM WIDTH OF A BRICK MORTAR JOINT SHALL BE $\frac{1}{2}$ INCH. THIS RESTRICTION SHALL ALSO APPLY TO THE JOINT FORMED ADJACENT TO THE PERIMETER OF A REPAIR AREA, WHERE THE ROWS MAY NOT BE PARALLEL TO ONE ANOTHER.

6. MORTARING OF JOINTS: ALL JOINTS SHALL BE MORTARED WITH A 50/50 MIXTURE BY VOLUME OF SAND AND CEMENT SO AS TO PROVIDE A FLUSH FINISH. THIS MAY REQUIRE MORE THAN ONE APPLICATION. FURTHER, MECHANICAL VIBRATION WILL BE REQUIRED FOR CONSOLIDATION OF DRY MORTAR MIX.

NOTE 'G' : FOR ALLEY REPAIRS, THE PAVEMENT REPLACEMENT SHALL CONFORM TO THE TYPE AND THICKNESS OF THE EXISTING PAVEMENT. CHIP AND SEAL TYPE ALLEYS SHALL REQUIRE MATCHING THE EXISTING THICKNESS OF PAVEMENT WITH THE APPROPRIATE COMBINATION OF MATERIALS BASED ON THE SIZE OF THE EXCAVATION. THE MINIMUM SHALL CONSIST OF 6" OF ITEM 448 ASPHALT CONCRETE. FINISHED CONCRETE PAVEMENT IS NOT PERMITTED. MATERIALS USED SHALL CONFORM TO THE REQUIREMENTS OF THE CURRENT CMSC.

IF MORE THAN $\frac{1}{3}$ OF THE WIDTH OF AN ALLEY IS REMOVED, THE PAVEMENT SHALL BE REPLACED AS PER TYPE 1 AND THEN OVERLAYED OVER THE TOTAL WIDTH OF PAVEMENT AND LENGTH OF TRENCH.

NOTE 'H' : ITEM 912 - COMPACTED GRANULAR MATERIAL:
THIS METHOD OF BACKFILL CAN ONLY BE USED WITH FULL TIME CITY INSPECTION. AN INSPECTION FEE MUST BE POSTED WHEN THE PERMIT IS ISSUED.

NOTE 'I' : CONCRETE BASE OR PAVEMENT
IF PAVING REQUIREMENTS ALLOW FOR SUFFICIENT CURING TIME SO THAT FAST SETTING CONCRETE IS NOT NEEDED, STANDARD CONCRETE BASE OR PAVEMENT MAY BE PLACED AS PER THE CMSC. THIS OPTION MUST BE NOTED ON THE PERMIT APPLICATION AND APPROVED BY THE CITY OF COLUMBUS.

NOTE 'J' : THE TRENCH WIDTH FOR SMALL PIPES AND CONDUITS SHALL BE OF SUFFICIENT WIDTH TO ALLOW FOR THE PROPER PLACEMENT OF THE BACKFILL MATERIAL. THE PAVEMENT PORTION OF THE TRENCH SHALL BE A MINIMUM OF 2 FT IN WIDTH. THIS IS TO ALLOW FOR THE PROPER COMPACTION OF THE ASPHALT PAVEMENT. IF THE TRENCH FOR PLACING CONDUIT IS NARROWER THAN 2 FT THEN THE PAVEMENT PORTION SHALL BE CUT BACK TO PROVIDE THE 2 FT MINIMUM FOR PAVING OPERATIONS.

PAVEMENT & UTILITY CUT REPAIR STANDARDS

CITY OF COLUMBUS, OHIO
DEPARTMENT OF PUBLIC SERVICE
DIVISION OF DESIGN AND CONSTRUCTION

STD DWG
1441
12/1/13
SHT 5 OF 7

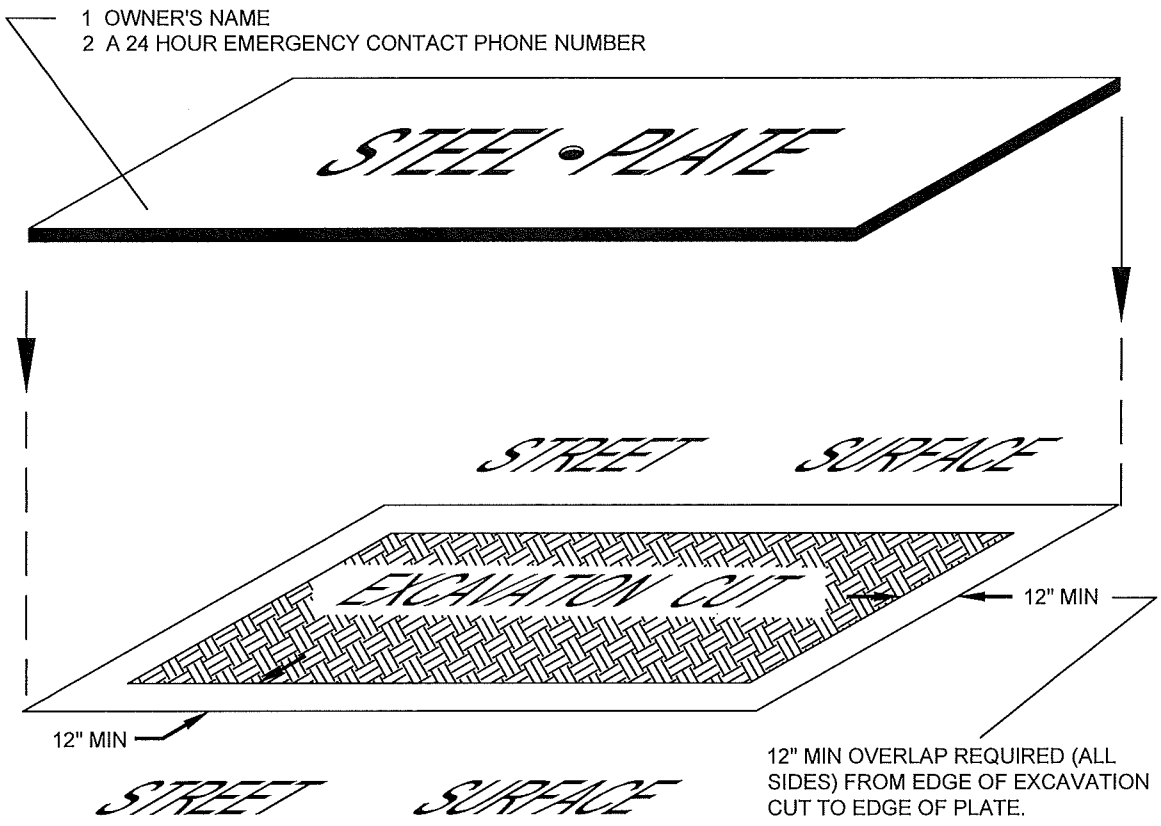

ALL STEEL PLATES MUST HAVE THE FOLLOWING INFORMATION CLEARLY AND LEGIBLY 'ETCHED' INTO THEIR TOP SURFACE:

1 OWNER'S NAME
2 A 24 HR. EMERGENCY CONTACT PHONE NUMBER.

NO STEEL PINS ARE PERMITTED.

SEE SHEET 7 FOR SIGNING REQUIREMENTS.

STEEL PLATE REQUIREMENTS

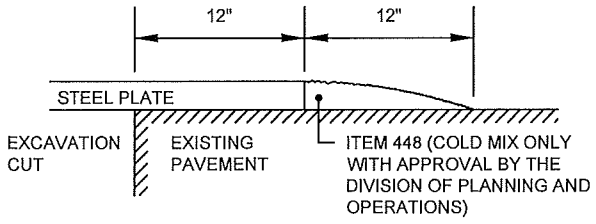

PAVEMENT & UTILITY CUT REPAIR STANDARDS

CITY OF COLUMBUS, OHIO
DEPARTMENT OF PUBLIC SERVICE
DIVISION OF DESIGN AND CONSTRUCTION

STD DWG
1441
12/1/13
SHT 6 OF 7

SIGNS ARE TO BE 36" x 36" FOR RESIDENTIAL AND DOWNTOWN AREAS AND 48" x 48" ON MULTI-LANE, HIGH SPEED (45 MPH OR GREATER) ROADWAYS.

SIGN COC - 327 (R/L) IS REQUIRED AT ALL PLATE LOCATIONS. SIGN COC - 328 IS REQUIRED WHEN POSTED SPEED IS 35 MPH OR GREATER.

SIGNS SHOULD BE PLACED IN ALL DIRECTIONS THAT ARE AFFECTED.

SIGNS SHOULD BE DUAL MOUNTED ON MULTI-LANE, ONE-WAY ROADWAYS.

ALL SIGNS SHALL BE MOUNTED IN ACCORANCE WITH THE OHIO MANUAL OF UNIFORM TRAFFIC CONTROL DEVICES (OMUTCD).

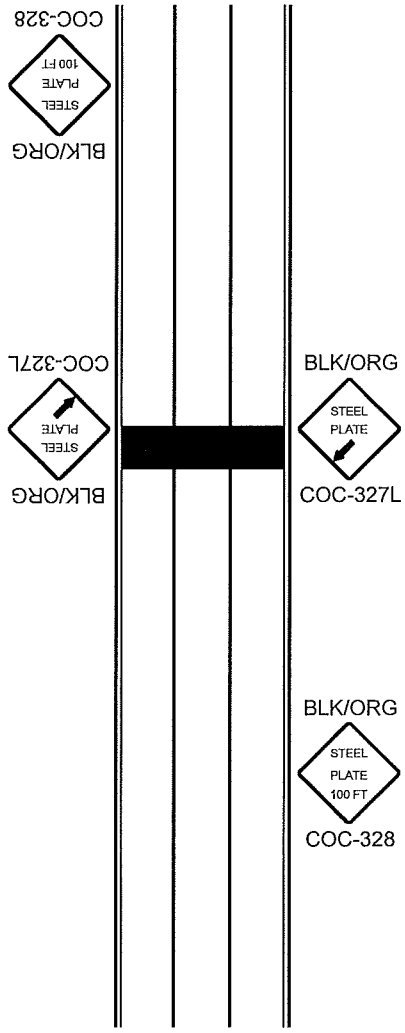

STEEL PLATE REQUIREMENTS

PAVEMENT & UTILITY CUT REPAIR STANDARDS

CITY OF COLUMBUS, OHIO
DEPARTMENT OF PUBLIC SERVICE
DIVISION OF DESIGN AND CONSTRUCTION

STD DWG
1441
12/1/13
SHT 7 OF 7

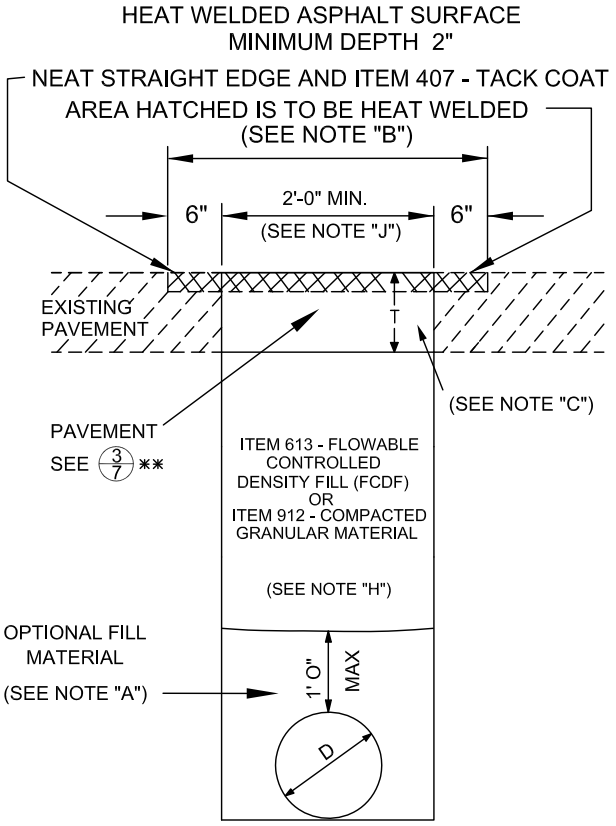

TYPE I

STANDARD FLEXIBLE ASPHALT REPAIR WITH HEATWELD SURFACE (SEE NOTE "B")

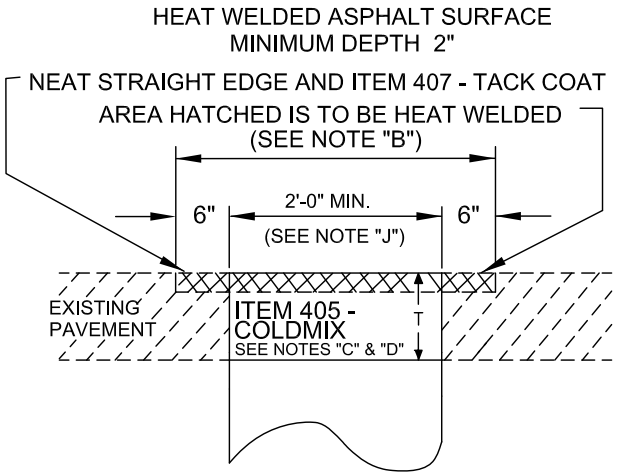

TYPE II

WINTER OPERATIONS FLEXIBLE ASPHALT REPAIR WITH HEATWELD SURFACE (SEE NOTE "E")

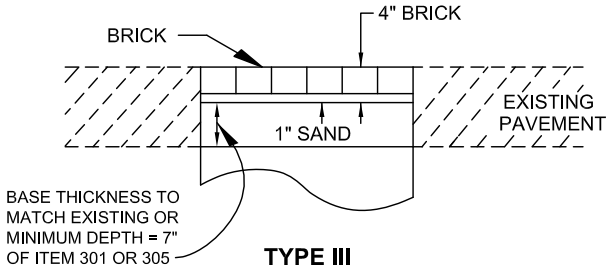

TYPE III

BRICK STREET REPAIR (SEE NOTE "F")

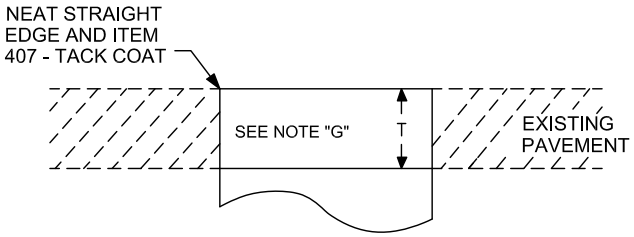

TYPE IV

ALLEY REPAIR

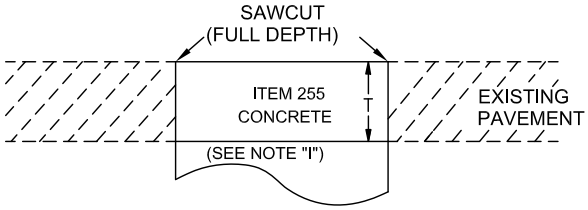

TYPE V

CONCRETE STREET REPAIR OR CONCRETE BUS PAD

BACKFILL FOR ALL TYPES SHALL MEET THE REQUIREMENTS SHOWN IN TYPE I ABOVE.

T: MATCH EXISTING PAVEMENT THICKNESS, HOWEVER, MINIMUM OF 10" ON ALL STREET CUTS AND 6" ON ALL ALLEYS.

PAVEMENT & UTILITY CUT REPAIR STANDARDS

CITY OF COLUMBUS, OHIO
DEPARTMENT OF PUBLIC SERVICE
DIVISION OF DESIGN AND CONSTRUCTION

STD DWG
1441

12/1/14

CITY ENGINEER

SHT 1 OF 7

SIDEWALK AND CURB REPAIR DETAILS

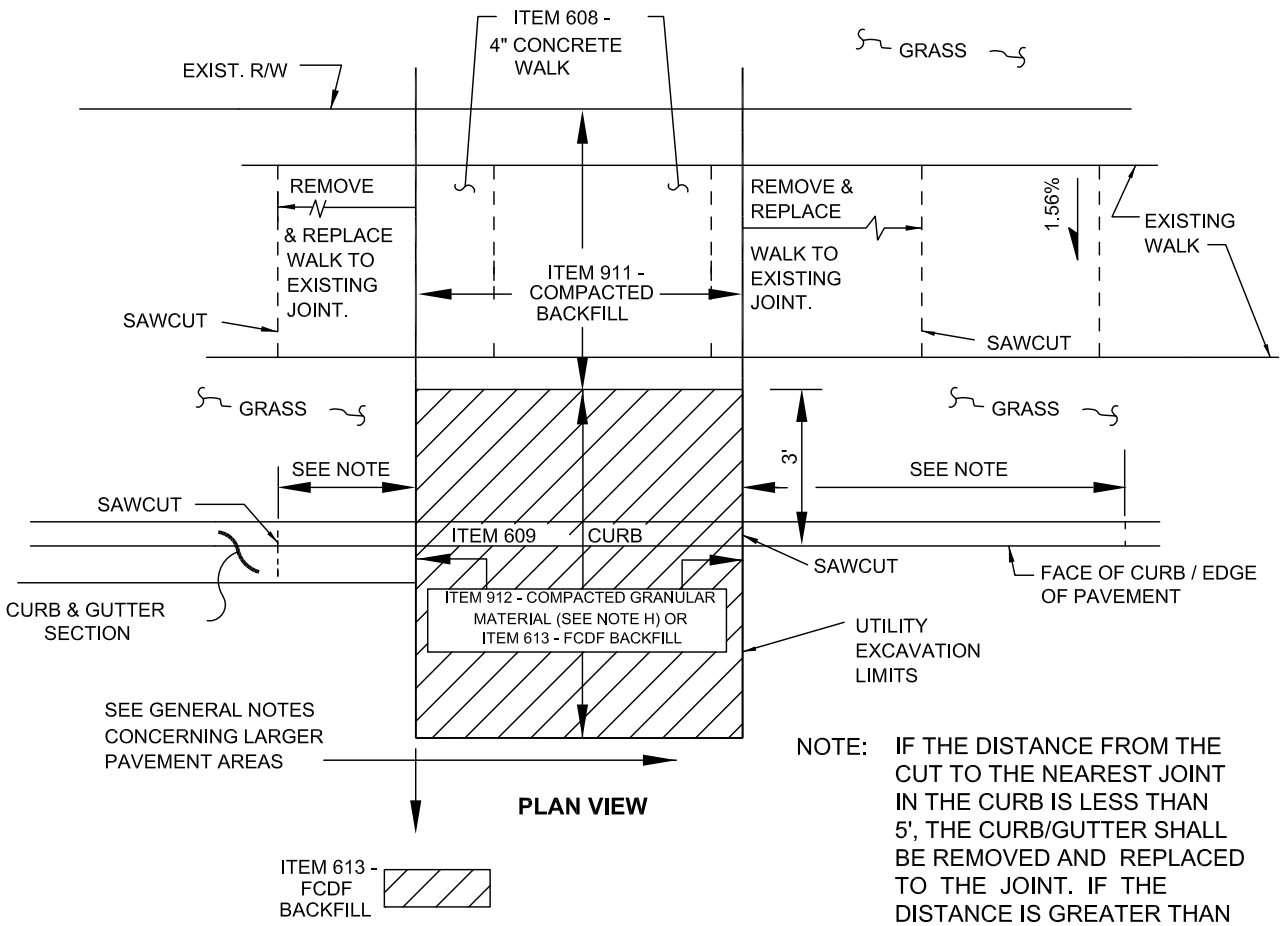

NOTE: IF THE DISTANCE FROM THE CUT TO THE NEAREST JOINT IN THE CURB IS LESS THAN 5', THE CURB/GUTTER SHALL BE REMOVED AND REPLACED TO THE JOINT. IF THE DISTANCE IS GREATER THAN 5', THE CURB MAY REMAIN.

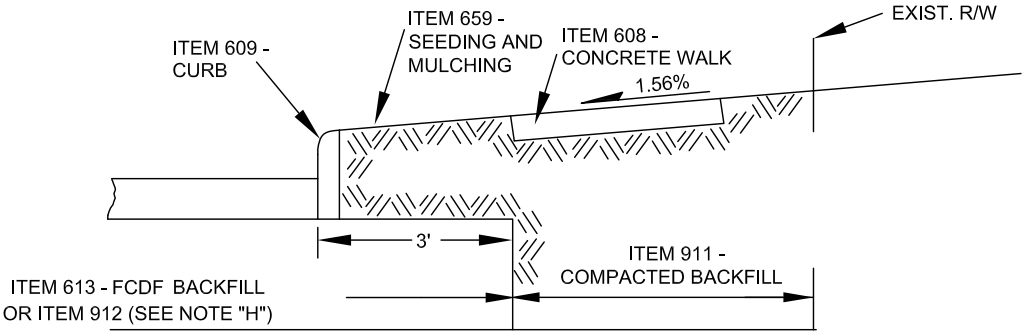

BOTTOM OF EXCAVATION

ALL GRASS AREAS SHALL BE SEEDED IN ACCORDANCE WITH ITEM 659 - SEEDING AND MULCHING.

PAVEMENT & UTILITY CUT REPAIR STANDARDS

CITY OF COLUMBUS, OHIO
DEPARTMENT OF PUBLIC SERVICE
DIVISION OF DESIGN AND CONSTRUCTION

STD DWG
1441
12/1/14
SHT 2 OF 7

GENERAL NOTES

EXCAVATION PERMIT REQUIRED: A CITY OF COLUMBUS STREET EXCAVATION PERMIT IS REQUIRED FOR ALL EXCAVATIONS WITHIN THE PUBLIC RIGHT-OF-WAY, AS SET FORTH BY COLUMBUS CITY CODE, CHAPTER 903 AND ISSUED IN ACCORDANCE WITH PROVISIONS IN THE GENERAL RULES AND REGULATIONS OF THE DEPARTMENT OF PUBLIC SERVICE.

SCOPE OF WORK

THIS WORK SHALL CONSIST OF PAVEMENT REMOVAL, NECESSARY EXCAVATION, AND PAVEMENT REPLACEMENT IN ACCORDANCE WITH THE DETAILS SHOWN HEREIN. ALL WORK AND MATERIALS SHALL CONFORM TO THE REQUIREMENTS OF THE CURRENT CITY OF COLUMBUS CONSTRUCTION AND MATERIALS SPECIFICATION (CMSC).

PROCEDURES USED FOR THE PAVEMENT REMOVAL AND REPLACEMENT SHALL NOT CAUSE SPALLING OR CRACKING OF ADJACENT PAVEMENT.

WHEN THE PAVEMENT IS REMOVED AND THE CONTRACTOR IS UNABLE TO COMPLETE THE REQUIRED REPLACEMENT IN TIME FOR IT TO BE OPENED TO TRAFFIC AS INDICATED ON THE PERMIT, THE EXCAVATION SHALL BE FILLED WITH A BITUMINOUS PATCH MATERIAL WITH A DURABLE SURFACE OR PROPERLY PLATED. (AS PER CITY CODE CHAPTER 903 &/OR SHEET 7 OF THIS STANDARD DRAWING) THE CONTRACTOR WILL BE REQUIRED TO MAINTAIN THESE PATCHES WHILE THEY ARE IN SERVICE. THE COST OF PLACING, MAINTAINING, AND REMOVING AND DISPOSING OF THE TEMPORARY PATCHES OR PLATES WILL BE AT THE CONTRACTOR'S EXPENSE.

WHEN ITEM 613 FCDF IS USED AS A BACKFILL, NO PAVEMENT SHALL BE PLACED UNTIL BLEED WATER HAS BEEN EVAPORATED FROM THE FCDF SURFACE OR HAS BEEN DRAINED OR REMOVED FROM THE SURFACE. ITEM 613 FCDF IS NOT PERMITTED AS A TEMPORARY DRIVING SURFACE.

THE BACKFILLING PAVEMENT REPAIR AND/OR HEAT WELDING SHALL BE DONE BY THE CONTRACTOR OR PERMITEE IN ACCORDANCE WITH CITY SPECIFICATIONS. IF DESIRED, ANY OR ALL OF THIS WORK CAN BE PERFORMED BY THE CITY OF COLUMBUS. THE CITY SHALL COLLECT APPROPRIATE FEES AT THE TIME THE PERMIT IS ISSUED FOR SAID WORK.

RESTORATION OF ANY SIDEWALK, CURB, STREET PAVEMENT, ETC., SHALL OCCUR NO LATER THAN 30 DAYS AFTER CONCLUSION OF ANY UTILITY REPAIR OR INSTALLATION ACTIVITY. CONSTRUCTION ACTIVITY COMPLETED DECEMBER THROUGH APRIL SHALL BE RESOLVED NO LATER THAN MAY 31ST. ADDITIONAL PERMITS SHALL NOT BE ISSUED UNTIL THE VIOLATIONS ARE CORRECTED TO THE SATISFACTION OF THE DEPARTMENT OF PUBLIC SERVICE. IN ADDITION, EACH VIOLATION MAY BE DEALT WITH IN ACCORDANCE WITH SECTION 903.99 OF THE COLUMBUS CITY CODE.

** PAVING STANDARDS FOR LARGE TRENCHES OR PAVING AREAS

THE PAVEMENT REPAIR SECTION SHALL CONFORM TO 3" OF ITEM 448 - ASPHALT CONCRETE ON EITHER 7" OF ITEM 301 - ASPHALT CONCRETE BASE OR ITEM 305 - PORTLAND CEMENT CONCRETE BASE.

PAVEMENT & UTILITY CUT REPAIR STANDARDS

CITY OF COLUMBUS, OHIO
DEPARTMENT OF PUBLIC SERVICE
DIVISION OF DESIGN AND CONSTRUCTION

STD DWG
1441
12/1/14

WHEN A TRENCH EXCEEDS 100 FT. IN LENGTH, THE REPAIR SHALL INCLUDE PLANING A FULL LANE WIDTH (OR ANY OTHER LANE WIDTH AS DIRECTED BY THE DEPARTMENT OF PUBLIC SERVICE) TO A DEPTH OF 1½" FOR THE ENTIRE LENGTH OF THE TRENCH. THE PLANED AREA SHALL THEN BE REPAVED WITH A PAVER IN ACCORDANCE WITH CURRENT CITY STANDARD SPECIFICATIONS. ITEM 423 - CRACK SEALING, TYPE 1 SHALL BE APPLIED TO EXPOSED JOINTS ONCE THE PAVING OPERATION HAS BEEN COMPLETED.

WHEN TRENCHING WORK CROSSES LANES, ALL AFFECTED LANES SHALL REQUIRE PLANING AND RESURFACING AS DESCRIBED ABOVE. THIS WORK SHALL INCLUDE ALL OF THE AFFECTED PAVEMENT AREA.

SPECIAL NOTES

NOTE 'A' : WHEN USING FLOWABLE CONTROLLED DENSITY FILL (FCDF), THE OPTIONAL FILL AREA OVER THE CONDUIT MAY BE BACKFILLED WITH SAND, GRANULAR MATERIAL, OR OTHER SUITABLE 912 MATERIAL, FOR A DISTANCE NOT TO EXCEED 1 FT. A PROTECTIVE BARRIER OF VISQUEEN OR SIMILAR MATERIAL IS PERMITTED.

NOTE 'B' : FOR TYPE I AND TYPE II CUT REPAIRS, THE AREA TO BE HEAT WELDED IS TO INCLUDE THE CUT AND EXTEND FOR 6" BEYOND EACH SIDE OF THE CUT FOR A NOMINAL DEPTH OF 2".

NOTE 'C' : FOR TYPE I AND TYPE II PAVEMENT REPAIR, THE ITEM 448 - HOT ASPHALT CONCRETE OR ITEM 405 - COLD MIX SHALL BE PLACED IN LIFTS NOT EXCEEDING 3" AND COMPACTED WITH A COMBINATION VIBRATORY PLATE COMPACTOR, OR A VIBRATORY STEEL WHEELED ROLLER WITH A MINIMUM CERTIFIED FORCE OF 2000 POUNDS. IN ALL CASES THE SURFACE LIFT SHALL BE COMPACTED WITH THE VIBRATORY STEEL WHEELED ROLLER. WHEN PLACING ITEM 405 - COLD MIX FULL DEPTH, MATERIAL TEMPERATURE SHALL BE 70 DEGREES OR ABOVE.

NOTE 'D' : COLD MIX SHALL BE ITEM 405 - COLD MIX OR OTHER COLD MIX APPROVED BY THE CITY OF COLUMBUS. IN LIEU OF COLD MIX, THE CONTRACTOR MAY STOCKPILE ITEM 448 - ASPHALT CONCRETE AND REHEAT IT TO PLACE IN CUT AS PAVEMENT REPAIR. TYPE II PAVEMENT REPLACEMENT SHALL CONSIST OF FULL DEPTH ITEM 405 - COLD MIX FOR SMALL EXCAVATIONS. LARGE EXCAVATIONS SHALL REQUIRE A MINIMUM OF 7" OF FAST SETTING PORTLAND CEMENT AND 2" OF ITEM 405 - COLD MIX.

NOTE 'E' : THE COLD MIX IS TO BE REPLACED WITH ITEM 448 - ASPHALT CONCRETE WHICH IS TO BE HEAT WELDED AS SET FORTH IN NOTE 'B'. THIS WORK SHALL BE PERFORMED AS SOON AS ASPHALT IS AVAILABLE.

PAVEMENT & UTILITY CUT REPAIR STANDARDS

CITY OF COLUMBUS, OHIO
DEPARTMENT OF PUBLIC SERVICE
DIVISION OF DESIGN AND CONSTRUCTION

STD DWG
1441
12/1/14
SHT 4 OF 7

NOTE 'F' : REPAIR OF BRICK STREETS

1. BRICKS REMOVED FROM A REPAIR AREA SHALL BE STORED IN A SAFE PLACE BY THE CONTRACTOR FOR REUSE. THE CONTRACTOR WILL BE RESPONSIBLE FOR REPLACING ANY BRICKS THAT ARE STOLEN OR DAMAGED, AT NO ADDITIONAL COST TO THE CITY.

2. IF BRICKS ARE SUPPLIED BY THE CONTRACTOR, THEY MUST FIRST BE APPROVED BY THE CITY BEFORE THEY ARE USED.

3. SAW CUTTING: ALL PARTIAL BRICKS SHALL BE SAWCUT. FURTHER, NO BRICK WILL BE PERMITTED TO BE CUT, FOR REPLACEMENT, TO A LENGTH LESS THAN 1/2 ITS ORIGINAL LENGTH. THIS MAY REQUIRE SAW CUTTING OF ADJACENT UNDISTURBED BRICK(S).

4. THE EXISTING BASE MATERIAL SHALL BE CUT BACK TO AS NEARLY VERTICAL AS POSSIBLE. IF SHEARING OF THE ADJACENT BASE RESULTS, THE CONTRACTOR SHALL REMOVE ADDITIONAL BASE MATERIAL UNTIL A VERTICAL FACE IS ACHIEVED.

5. THE MAXIMUM WIDTH OF A BRICK MORTAR JOINT SHALL BE 1/2". THIS RESTRICTION SHALL ALSO APPLY TO THE JOINT FORMED ADJACENT TO THE PERIMETER OF A REPAIR AREA, WHERE THE ROWS MAY NOT BE PARALLEL TO ONE ANOTHER.

6. MORTARING OF JOINTS: ALL JOINTS SHALL BE MORTARED WITH A 50/50 MIXTURE BY VOLUME OF SAND AND CEMENT SO AS TO PROVIDE A FLUSH FINISH. THIS MAY REQUIRE MORE THAN ONE APPLICATION. FURTHER, MECHANICAL VIBRATION WILL BE REQUIRED FOR CONSOLIDATION OF DRY MORTAR MIX.

NOTE 'G' : FOR ALLEY REPAIRS, THE PAVEMENT REPLACEMENT SHALL CONFORM TO THE TYPE AND THICKNESS OF THE EXISTING PAVEMENT. CHIP AND SEAL TYPE ALLEYS SHALL REQUIRE MATCHING THE EXISTING THICKNESS OF PAVEMENT WITH THE APPROPRIATE COMBINATION OF MATERIALS BASED ON THE SIZE OF THE EXCAVATION. THE MINIMUM SHALL CONSIST OF 6" OF ITEM 448 - ASPHALT CONCRETE. FINISHED CONCRETE PAVEMENT IS NOT PERMITTED. MATERIALS USED SHALL CONFORM TO THE REQUIREMENTS OF THE CURRENT CMSC.

IF MORE THAN 1/3 OF THE WIDTH OF AN ALLEY IS REMOVED, THE PAVEMENT SHALL BE REPLACED AS PER TYPE 1 AND THEN OVERLAYED OVER THE TOTAL WIDTH OF PAVEMENT AND LENGTH OF TRENCH.

NOTE 'H' : ITEM 912 - COMPACTED GRANULAR MATERIAL:
THIS METHOD OF BACKFILL CAN ONLY BE USED WITH FULL TIME CITY INSPECTION. AN INSPECTION FEE MUST BE POSTED WHEN THE PERMIT IS ISSUED.

NOTE 'I' : CONCRETE BASE OR PAVEMENT
IF PAVING REQUIREMENTS ALLOW FOR SUFFICIENT CURING TIME SO THAT FAST SETTING CONCRETE IS NOT NEEDED, STANDARD CONCRETE BASE OR PAVEMENT MAY BE PLACED AS PER THE CMSC. THIS OPTION MUST BE NOTED ON THE PERMIT APPLICATION AND APPROVED BY THE CITY OF COLUMBUS.

NOTE 'J' : THE TRENCH WIDTH FOR SMALL PIPES AND CONDUITS SHALL BE OF SUFFICIENT WIDTH TO ALLOW FOR THE PROPER PLACEMENT OF THE BACKFILL MATERIAL. THE PAVEMENT PORTION OF THE TRENCH SHALL BE A MINIMUM OF 2 FT. IN WIDTH. THIS IS TO ALLOW FOR THE PROPER COMPACTION OF THE ASPHALT PAVEMENT. IF THE TRENCH FOR PLACING CONDUIT IS NARROWER THAN 2 FT. THEN THE PAVEMENT PORTION SHALL BE CUT BACK TO PROVIDE THE 2 FT. MINIMUM FOR PAVING OPERATIONS.

PAVEMENT & UTILITY CUT REPAIR STANDARDS

CITY OF COLUMBUS, OHIO
DEPARTMENT OF PUBLIC SERVICE
DIVISION OF DESIGN AND CONSTRUCTION

STD DWG
1441
12/1/14

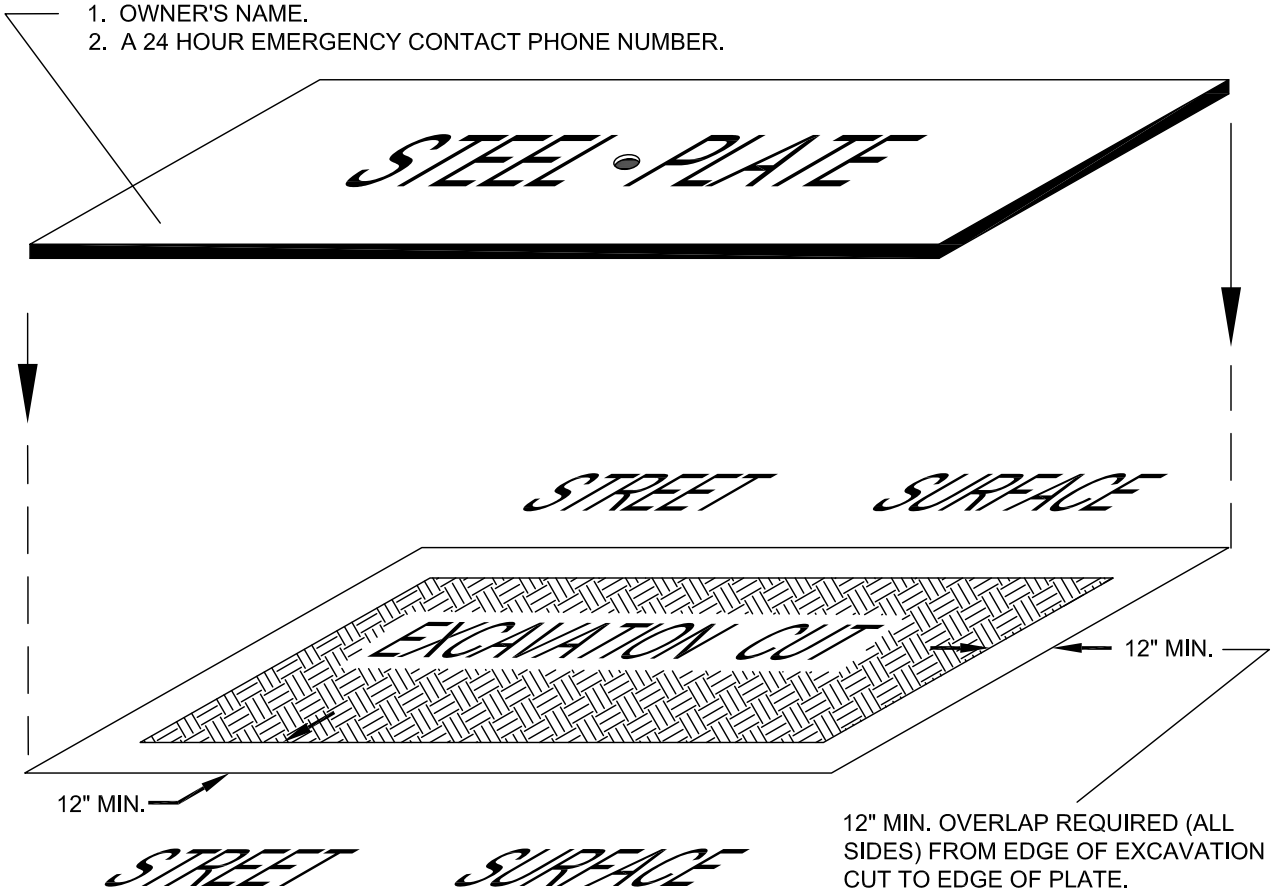

ALL STEEL PLATES MUST HAVE THE FOLLOWING INFORMATION CLEARLY AND LEGIBLY 'ETCHED' INTO THEIR TOP SURFACE:

1. OWNER'S NAME.
2. A 24 HOUR EMERGENCY CONTACT PHONE NUMBER.

MINIMUM THICKNESS OF STEEL PLATES	
SIZE OF PLATE	THICKNESS
4' x 4'	1/2"
4' x 6'	3/4"
LARGER	1"

NO STEEL PINS ARE PERMITTED.

SEE SHEET 7 FOR SIGNING REQUIREMENTS.

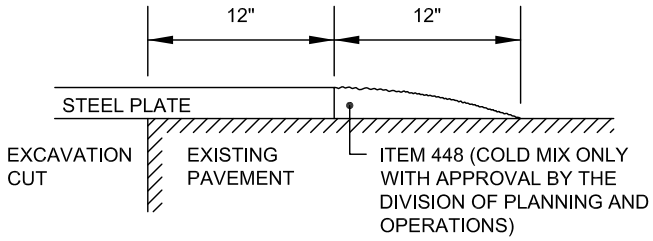

STEEL PLATE REQUIREMENTS

PAVEMENT & UTILITY CUT REPAIR STANDARDS

CITY OF COLUMBUS, OHIO
DEPARTMENT OF PUBLIC SERVICE
DIVISION OF DESIGN AND CONSTRUCTION

STD DWG
1441
12/1/14
SHT 6 OF 7

SIGNS ARE TO BE 36"x36" FOR RESIDENTIAL AND DOWNTOWN AREAS AND 48"x48" ON MULTI-LANE, HIGH SPEED (45 MPH OR GREATER) ROADWAYS.

SIGN COC-327 (R/L) IS REQUIRED AT ALL PLATE LOCATIONS. SIGN COC-328 IS REQUIRED WHEN POSTED SPEED IS 35 MPH OR GREATER.

SIGNS SHOULD BE PLACED IN ALL DIRECTIONS THAT ARE AFFECTED.

SIGNS SHOULD BE DUAL MOUNTED ON MULTI-LANE, ONE-WAY ROADWAYS.

ALL SIGNS SHALL BE MOUNTED IN ACCORANCE WITH THE OHIO MANUAL OF UNIFORM TRAFFIC CONTROL DEVICES (OMUTCD).

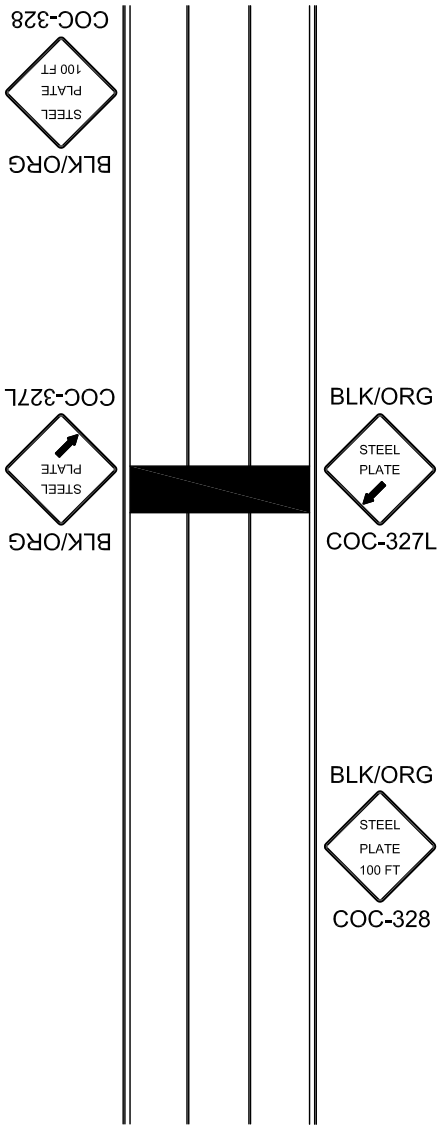

STEEL PLATE REQUIREMENTS

PAVEMENT & UTILITY CUT REPAIR STANDARDS

CITY OF COLUMBUS, OHIO
DEPARTMENT OF PUBLIC SERVICE
DIVISION OF DESIGN AND CONSTRUCTION

STD DWG
1441
12/1/14
SHT 7 OF 7

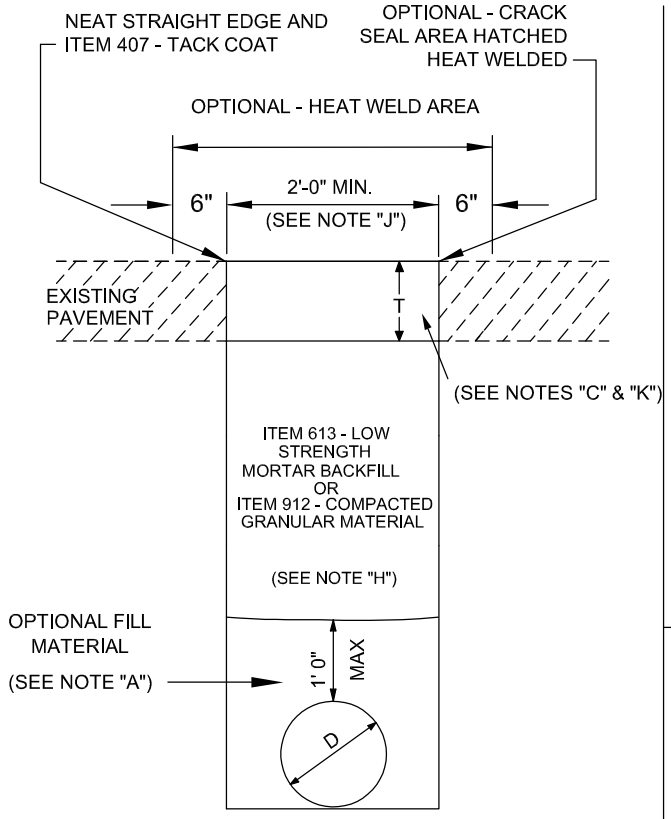

TYPE I

STANDARD FLEXIBLE ASPHALT REPAIR
(SEE NOTES "B" & "C")

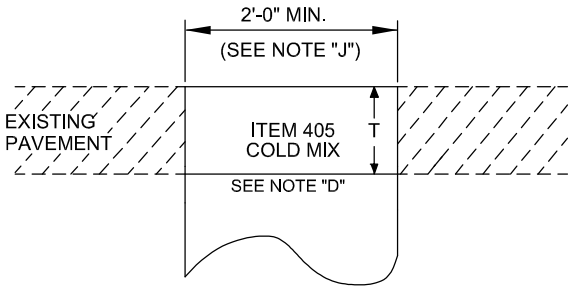

TYPE II
WINTER OPERATIONS FLEXIBLE ASPHALT REPAIR
(SEE NOTE "E")

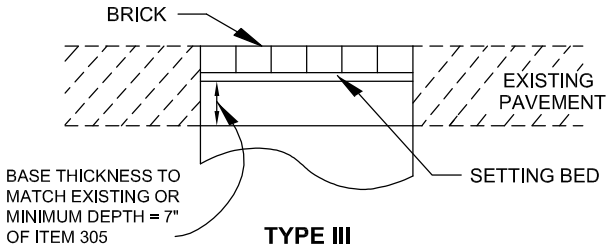

TYPE III

BRICK STREET REPAIR
(SEE NOTE "F")

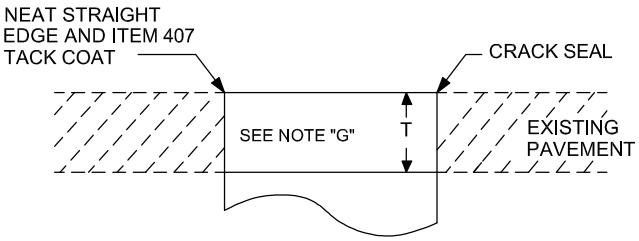

TYPE IV
ALLEY REPAIR
(SEE NOTE "G")

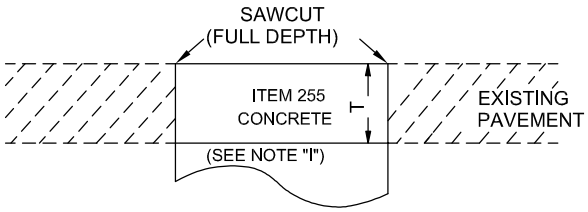

TYPE V

CONCRETE STREET REPAIR, CONCRETE BASE, CONCRETE BUS PAD OR CONCRETE PANEL REPLACEMENT
(SEE NOTE "I")

BACKFILL FOR ALL TYPES SHALL MEET THE REQUIREMENTS SHOWN IN TYPE I ABOVE.

T: MATCH EXISTING PAVEMENT THICKNESS, HOWEVER, MINIMUM OF 10" ON ALL STREET CUTS AND 6" ON ALL ALLEYS.

PAVEMENT & UTILITY CUT REPAIR STANDARDS

CITY OF COLUMBUS, OHIO
DEPARTMENT OF PUBLIC SERVICE
DIVISION OF DESIGN AND CONSTRUCTION

STD DWG
1441

4/22/2019

CITY ENGINEER

SHT 1 OF 13

SIDEWALK AND CURB REPAIR DETAILS

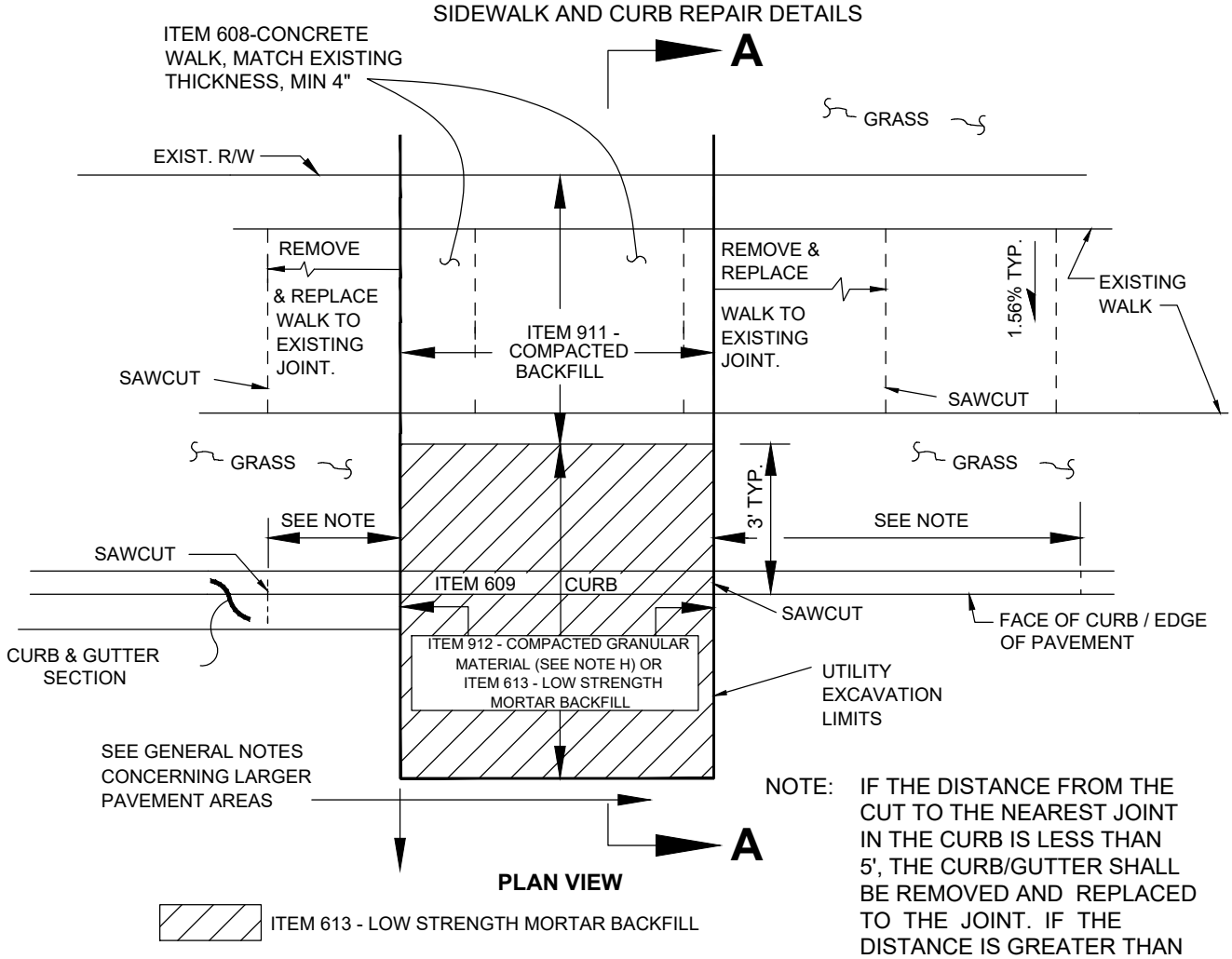

NOTE: IF THE DISTANCE FROM THE CUT TO THE NEAREST JOINT IN THE CURB IS LESS THAN 5', THE CURB/GUTTER SHALL BE REMOVED AND REPLACED TO THE JOINT. IF THE DISTANCE IS GREATER THAN 5', THE CURB MAY REMAIN.

SECTION A-A

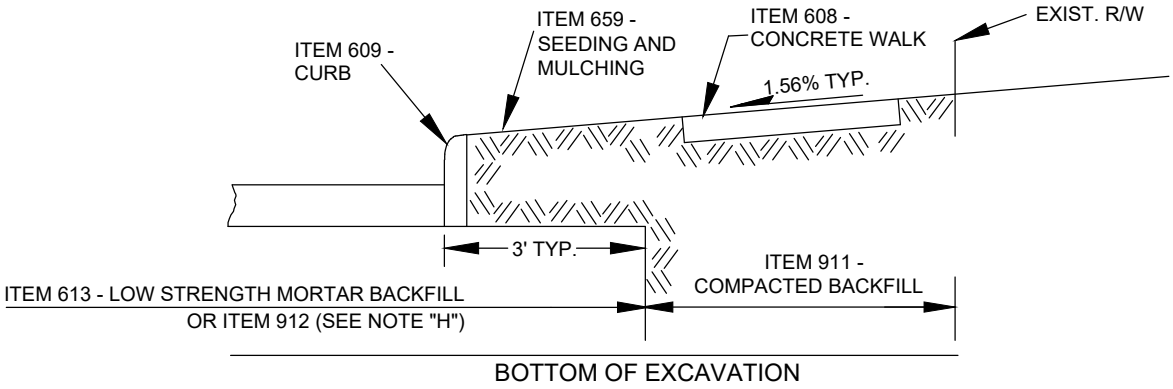

ALL GRASS AREAS SHALL BE SEEDED IN ACCORDANCE WITH ITEM 659 - SEEDING AND MULCHING.

PAVEMENT & UTILITY CUT REPAIR STANDARDS

CITY OF COLUMBUS, OHIO
DEPARTMENT OF PUBLIC SERVICE
DIVISION OF DESIGN AND CONSTRUCTION

STD DWG
1441

4/22/2019

SHT 2 OF 13

GENERAL NOTES

EXCAVATION PERMIT REQUIRED: A CITY OF COLUMBUS STREET EXCAVATION PERMIT IS REQUIRED FOR ALL EXCAVATIONS WITHIN THE PUBLIC RIGHT-OF-WAY, AS SET FORTH BY COLUMBUS CITY CODE, CHAPTER 903 AND ISSUED IN ACCORDANCE WITH PROVISIONS IN THE GENERAL RULES AND REGULATIONS OF THE DEPARTMENT OF PUBLIC SERVICE (DPS).

SCOPE OF WORK

THE CONTRACTOR SHALL FULLY COMPLY WITH THE CITY OF COLUMBUS ADA RULES AND REGULATIONS AND THE CITY OF COLUMBUS CONSTRUCTION AND MATERIAL SPECIFICATIONS, CURRENT EDITION.

THIS WORK SHALL CONSIST OF PAVEMENT REMOVAL, NECESSARY EXCAVATION, AND PAVEMENT REPLACEMENT IN ACCORDANCE WITH THE DETAILS SHOWN HEREIN. ALL WORK AND MATERIALS SHALL CONFORM TO THE REQUIREMENTS OF THE CURRENT CITY OF COLUMBUS CONSTRUCTION AND MATERIALS SPECIFICATION (CMSC).

PROCEDURES USED FOR THE PAVEMENT REMOVAL AND REPLACEMENT SHALL NOT CAUSE SPALLING OR CRACKING OF ADJACENT PAVEMENT.

WHEN THE PAVEMENT IS REMOVED AND THE CONTRACTOR IS UNABLE TO COMPLETE THE REQUIRED REPLACEMENT IN TIME FOR IT TO BE OPENED TO TRAFFIC AS INDICATED ON THE PERMIT, THE EXCAVATION SHALL BE FILLED WITH THOROUGHLY COMPACTED ITEM 405 BITUMINOUS COLD MIX WITH A DURABLE SURFACE (OR APPROVED BITUMINOUS MATERIAL) OR PROPERLY PLATED PER CHAPTER 903 AND SHEETS 12 AND 13 OF THIS STANDARD DRAWING. THE CONTRACTOR WILL BE REQUIRED TO MAINTAIN THESE TEMPORARY MEASURES WHILE THEY ARE IN SERVICE. THE COST OF PLACING, MAINTAINING, REMOVING AND DISPOSING OF THE TEMPORARY PATCHES OR PLATES WILL BE AT THE CONTRACTOR'S EXPENSE.

WHEN ITEM 613 LOW STRENGTH MORTAR BACKFILL (LSMB) IS USED AS A BACKFILL, NO PAVEMENT SHALL BE PLACED UNTIL BLEED WATER HAS BEEN EVAPORATED FROM THE LSMB SURFACE OR HAS BEEN DRAINED OR REMOVED FROM THE SURFACE. ITEM 613 LSMB IS NOT PERMITTED AS A TEMPORARY DRIVING SURFACE OR WITHIN THE DEPTH OF THE PAVEMENT REPAIR. LSMB SHALL NOT BE PLACED HIGHER THAN THE SUBGRADE ELEVATION AND NOT EXTEND INTO THE PAVEMENT BUILD-UP.

THE PAVEMENT REPAIR SHALL BE PERFORMED BY THE CONTRACTOR OR PERMITTEE IN ACCORDANCE WITH CITY SPECIFICATIONS. IF DESIRED, ANY OR ALL OF THIS WORK CAN BE PERFORMED BY THE CITY OF COLUMBUS. THE CITY SHALL COLLECT APPROPRIATE FEES AT THE TIME THE PERMIT IS ISSUED FOR SAID WORK. PAVEMENT RESTORATION MAY TRIGGER REQUIRED ADA IMPROVEMENTS PER CITY OF COLUMBUS ADA RULES AND REGULATIONS.

RESTORATION OF ANY SIDEWALK, CURB, STREET PAVEMENT (INCLUDING CRACK SEALING OR HEAT WELDING), ETC., SHALL OCCUR NO LATER THAN 30 DAYS AFTER CONCLUSION OF ANY UTILITY REPAIR OR INSTALLATION ACTIVITY. CONSTRUCTION ACTIVITY COMPLETED DECEMBER THROUGH APRIL SHALL BE RESOLVED NO LATER THAN MAY 31ST. ADDITIONAL PERMITS SHALL NOT BE ISSUED UNTIL THE VIOLATIONS ARE CORRECTED TO THE SATISFACTION OF THE DEPARTMENT OF PUBLIC SERVICE. IN ADDITION, EACH VIOLATION MAY BE ENFORCED IN ACCORDANCE WITH SECTION 903.99 OF THE COLUMBUS CITY CODE.

CITY CHAPTER 903 - SECTION 9 - NEW PAVEMENT OR REPAVEMENT

A THREE (3) YEAR MORATORIUM SHALL BE ENFORCED FOR ALL NEW PAVEMENT OR REPAVEMENT/RESURFACING. **NO PERMIT SHALL BE GRANTED FOR THE PURPOSE OF OPENING SUCH PAVEMENT FOR A PERIOD OF NO LESS THAN THREE (3) YEARS AFTER COMPLETION**, EXCEPT FOR THE PURPOSE OF REPAIRING LEAKING PIPES OR WORK DEEMED NECESSARY BY THE DIRECTOR OF PUBLIC SERVICE, CITY ENGINEER OR DESIGNEE. EMERGENCY REPAIRS OR PAVEMENT OPENINGS WITHIN THE THREE (3) YEAR MORATORIUM SHALL HAVE ADDITIONAL AND SPECIFIC REQUIREMENTS BEYOND THE MINIMUM REQUIREMENT OF STD DWG 1441.

SCOPE OF WORK (CONTINUED FROM PREVIOUS SHEET)

SPECIAL IMPROVED STREETS

SPECIAL IMPROVED STREETS, AS APPROVED BY THE DIRECTOR OF PUBLIC SERVICE, CITY ENGINEER OR DESIGNEE SHALL HAVE FIVE (5) YEAR MORATORIUM. NO PERMIT SHALL BE GRANTED FOR THE PURPOSE TO MAKE ANY OPENING ON ANY HARD SURFACE AREAS SUCH AS PAVEMENT, SIDEWALK, CURB, ETC., WITHIN THE RIGHT OF WAY OF SPECIAL IMPROVED STREET FOR A PERIOD OF NO LESS THAN FIVE (5) YEARS AFTER COMPLETION OF SUCH HARD SURFACE AREA. EMERGENCY REPAIRS OR PAVEMENT OPENINGS WITHIN THE FIVE (5) MORATORIUM SHALL HAVE ADDITIONAL AND SPECIFIC REQUIREMENTS BEYOND THE MINIMUM REQUIREMENTS OF STD DWG 1441 AND APPROVED ONLY BY THE DIRECTOR OF THE PUBLIC SERVICE AND CITY ENGINEER OR DESIGNEE.

CURB RAMP INSTALLATION

ALL CURB RAMPS SHALL BE INSTALLED PER STANDARD DRAWINGS 2300, 2319 AND DPS ADA RULES AND REGULATIONS.

SPECIAL PAVEMENT, BASE, AND STORMWATER BMPS

WHEN PAVEMENT CUTS OR REPAIRS IMPACT NON-CONVENTIONAL PAVEMENT BUILDUPS, THE CITY ENGINEER OR DESIGNEE WILL PROVIDE DIRECTION ON THE REQUIRED RESTORATION. IF THE NON-CONVENTIONAL PAVEMENT IS NOT IDENTIFIED IN THE DESIGN STAGE, IT IS THE PERMIT HOLDER'S RESPONSIBILITY TO BRING THIS TO THE ATTENTION OF THE DEPARTMENT OF PUBLIC SERVICE. SOME EXAMPLES OF NON-CONVENTIONAL PAVEMENT INCLUDE, FABRICS AND GRIDS USED TO STABILIZE SUBGRADE AND PAVEMENT, SPECIALITY BACKFILL AND SOIL SUPPORT STRUCTURES, PERMEABLE PAVEMENT AND STORMWATER BEST MANAGEMENT PRACTICES (BMPS).

TRAFFIC CONTROL

WHEN PAVEMENT CUTS OR REPAIRS REMOVE EXISTING STRIPING OR OTHERWISE RENDER STRIPING UNSERVICEABLE AS DETERMINED BY THE ENGINEER, TEMPORARY PAVEMENT MARKINGS PER CMSC 614 SHALL APPLY. TEMPORARY CLASS II MARKINGS SHALL BE PLACED IMMEDIATELY. CLASS II MARKINGS ARE ONLY FOR LANE LINES, CENTERLINES AND GORE MARKINGS AND PLACED FOR A MAXIMUM OF 14 DAYS. ALL TEMPORARY MARKINGS PLACED FOR A PERIOD LONGER THAN 14 DAYS BUT LESS THAN 30 DAYS SHALL BE ITEM 642 CLASS III MARKINGS. PERMANENT THERMOPLASTIC OR SPRAY THERMOPLASTIC SHALL BE PLACED WITHIN 30 DAYS ON A SURFACE COURSE. WHEN THERMOPLASTIC OR SPRAY THERMOPLASTIC IS TO BE INSTALLED, TEMPORARY MARKINGS SHALL BE CLASS III. ALL OVER WINTER TEMPORARY MARKINGS SHALL BE TYPE 1. ALL TEMPORARY PAVEMENT MARKINGS ON CONCRETE SHALL BE AS PER 740.06, TYPE I. PERMANENT PAVEMENT MARKINGS ON CONCRETE SHALL MATCH THE EXISTING PAVEMENT MARKINGS DIRECTED BY THE ENGINEER.

SPECIAL NOTES

NOTE 'A' : LOW STRENGTH MORTAR BACKFILL (LSMB)
WHEN USING LOW STRENGTH MORTAR BACKFILL (LSMB), THE OPTIONAL FILL AREA OVER THE CONDUIT MAY BE BACKFILLED WITH SAND, GRANULAR MATERIAL, OR OTHER SUITABLE 912 MATERIAL, FOR A DISTANCE NOT TO EXCEED 1 FT. A PROTECTIVE BARRIER OF VISQUEEN OR SIMILAR MATERIAL IS PERMITTED.

NOTE 'B' : TYPE 1 PAVEMENT REPAIR SEALING
FOR TYPE I PAVEMENT REPAIR SEALING OPTIONS - THE FOLLOWING METHODS ARE PERMITTED:

1. CRACK SEALING METHOD: SEAL THE PERIMETER SURFACE OF THE REPAIRED AREA BY APPLYING A NOMINAL 4 INCH STRIP OF APPROVED ITEM 423 - CRACK SEALING, TYPE II OR III.

2. HEAT WELD METHOD: FOR PAVEMENT REPAIR LOCATIONS, THE AREA TO BE HEAT WELDED IS TO INCLUDE THE CUT AND EXTEND FOR 6 INCHES BEYOND EACH SIDE OF THE CUT FOR A NOMINAL DEPTH OF 2 INCHES.

NOTE 'C' : TYPE 1 PAVEMENT REPAIR RESURFACING (SEE SHEETS 9-11)
FOR TYPE I PAVEMENT REPAIR APPLICATIONS, THE FOLLOWING METHODS ARE PERMITTED:

1. IF LANE WIDTH TO BE RESURFACED: USE ITEM 441 ASPHALT CONCRETE, INTERMEDIATE COURSE, TYPE 2, (BINDER MATCHING SURFACE COURSE) PLACED IN LIFTS NOT EXCEEDING 3 INCHES TO REPAIR PAVEMENT TO THE SURFACE. DURING THE LATER MILL AND ASPHALT OVERLAY OPERATION, USE ITEM 441 ASPHALT CONCRETE SURFACE COURSE, TYPE 1.
2. IF NO LANE WIDTH RESURFACING: USE ITEM 441 ASPHALT CONCRETE, INTERMEDIATE COURSE, TYPE 2, PLACED IN LIFTS NOT EXCEEDING 3 INCHES AND ITEM 441 ASPHALT CONCRETE, SURFACE COURSE, TYPE 1 PLACED AT A MAXIMUM 1.5 INCH LIFT THICKNESS. THE INTERMEDIATE COURSE MATERIAL IS NOT PERMITTED AS THE FINAL SURFACE COURSE.

THE ASPHALT BINDER FOR INTERMEDIATE AND SURFACE COURSE ASPHALT SHALL BE PG 70-22 ON ARTERIAL ROADWAYS, BUS ROUTES, AND WHERE SPECIFIED BY THE PERMIT OFFICE. ALL OTHER ROADS SHALL BE PG 64-22.

TRENCHES THAT REQUIRE FULL LANE RESURFACING SHALL INCLUDE FULL LANE RESURFACING ON ALL CONNECTING TRENCHES AND ASSOCIATED VALVE OR CASTING WORK AREAS ALONG ADJACENT STREETS (UTILITY SERVICE REPAIRS SHALL BE AS PER SHEETS 9, 10 AND 11.) REGARDLESS OF THE LENGTH OF THE CONNECTING TRENCH.

WHEN AN EXCAVATION EXCEEDS 100 FT IN LENGTH, THE REPAIR SHALL INCLUDE ITEM 254 PLANING OF A FULL LANE WIDTH (OR ANY OTHER LANE WIDTH AS DIRECTED BY THE DEPARTMENT OF PUBLIC SERVICE) TO A DEPTH OF 1- 1/2 INCHES FOR THE ENTIRE LENGTH OF THE EXCAVATION. THE RESURFACING SHALL NOT INTRODUCE ANY LONGITUDINAL PAVEMENT JOINTS. WHEN RESURFACING OUTSIDE LANES, RESURFACING SHALL EXTEND TO THE FACE OF CURB OR EDGE OF PAVEMENT. IF PAVEMENT PLANING DOES NOT PROVIDE A UNIFORM PLANED SURFACE DUE TO THE EXISTING PAVEMENT CONDITION, THE DEPTH OF THE PAVEMENT REMOVAL AND RESURFACING SHALL BE ADJUSTED ACCORDINGLY. WHERE THE PROPOSED RESURFACING IS IN CLOSE PROXIMITY TO AN EXISTING LONGITUDINAL JOINT, THE RESURFACING SHALL BE EXTENDED TO MEET OR OVERLAP THAT JOINT. WHEN RESURFACING ADJOINS AN AREA WITH EXISTING OVERLAID GUTTER, THE RESURFACING SHALL EXTEND THE FULL LANE WIDTH TO THE EXISTING PAVEMENT EDGE AT THE FACE OF CURB. THE PLANED AREA SHALL BE TACKED USING ITEM 407.02 MATERIAL PRIOR TO PLACING AND COMPACTING APPROVED ASPHALT CONCRETE WITH A PAVER IN ACCORDANCE WITH CURRENT CITY STANDARD SPECIFICATIONS. ITEM 423 -CRACK SEALING, TYPE II OR III SHALL BE APPLIED TO EXPOSED JOINTS ONCE THE PAVING OPERATION HAS BEEN COMPLETED.

SPECIAL NOTES

WHEN AN EXCAVATION CROSSES LANES, ALL LANES AFFECTED SHALL REQUIRE PLANING AND RESURFACING AS DESCRIBED ABOVE. THIS WORK SHALL INCLUDE ALL OF THE AFFECTED PAVEMENT AREA. WHEN EXCAVATION WORK FOR LATERALS CROSS LANES AT A FREQUENCY OF 2 OR MORE TRENCHES WITHIN 100 FT OF ROADWAY, THE REPAIR SHALL INCLUDE THE RESURFACING OF A FULL LANE WIDTH AS DESCRIBED ABOVE FOR THE AFFECTED LANES EXTENDING A MINIMUM OF 2 FT BEYOND THE LATERAL EXCAVATIONS LOCATED FARTHEST APART.

FULL LANE WIDTH RESURFACING OUTSIDE TRAVEL LANES SHALL EXTEND TO THE EDGE OF PAVEMENT FACE OF CURB UNLESS A SHOULDER WIDER THAN 4 FEET IS SEPARATED BY AN EXISTING LONGITUDINAL JOINT.

WHEN 2 OR MORE PAVEMENT REPAIRS ARE LOCATED WITHIN 100 FT OF EACH OTHER IN THE SAME LANE, THE REPAIR SHALL INCLUDE THE RESURFACING OF A FULL LANE WIDTH AS DESCRIBED ABOVE OF THE AFFECTED LANES EXTENDING A MINIMUM OF 2 FT BEYOND THE PAVEMENT REPAIRS LOCATED FARTHEST APART.

IF APPROVED BY THE CITY OF COLUMBUS, WHEN A PAVEMENT REPAIR AREA IS GREATER THAN 5 FT IN WIDTH AND/OR GREATER THAN 100 FT IN LENGTH, THE PAVEMENT REPAIR SECTION MAY CONFORM TO 3 INCHES OF ITEM 441 ASPHALT CONCRETE ON 7 INCHES OF ITEM 301 ASPHALT CONCRETE BASE (PLACED IN 2 LIFTS). LANE WIDTH RESURFACING REQUIREMENTS STILL APPLY. THIS OPTION MUST BE NOTED ON THE PERMIT APPLICATION AND APPROVED BY THE CITY OF COLUMBUS.

NOTE 'D' : TYPE II BITUMINOUS COLD MIX PLACEMENT

COLD MIX SHALL BE ITEM 405 BITUMINOUS COLD MIX OR OTHER COLD MIX APPROVED BY THE CITY OF COLUMBUS. IN LIEU OF COLD MIX, THE CONTRACTOR MAY USE STOCKPILED ITEM 441 ASPHALT CONCRETE AND REHEAT IT TO PLACE IN CUT AS TEMPORARY PAVEMENT REPAIR. TYPE II PAVEMENT REPLACEMENT SHALL CONSIST OF FULL DEPTH ITEM 405 COLD MIX FOR SMALL EXCAVATIONS.

NOTE 'E' : TYPE II TEMPORARY COLD MIX PLACEMENT

THE TEMPORARY COLD MIX IS TO BE REPLACED WITH ITEM 441 ASPHALT CONCRETE FOLLOWING PAVEMENT REPAIR PROCEDURES. THIS WORK SHALL BE PERFORMED AS SOON AS ASPHALT IS AVAILABLE.

NOTE 'F' : TYPE III REPAIR OF BRICK STREETS

1. THE CITY OF COLUMBUS MAINTAINS TWO TYPES OF BRICK STREETS: 1) HISTORICAL BRICK STREETS; AND 2) NEWER STYLE ROADWAY PAVER STREETS THAT COMPLY WITH SUPPLEMENTAL SPECIFICATION 1524. WHEN EXCAVATING AND REPAIRING BRICK STREETS, THE MATERIAL USED FOR REPLACEMENT SHALL MATCH THE EXISTING.
2. BRICKS OR PAVERS REMOVED FROM A REPAIR AREA SHALL BE STORED IN A SAFE PLACE BY THE CONTRACTOR FOR REUSE. THE CONTRACTOR SHALL BE RESPONSIBLE FOR REPLACING ANY BRICKS OR PAVERS THAT ARE STOLEN OR DAMAGED, AT NO ADDITIONAL COST TO THE CITY.
3. IF BRICKS OR PAVERS ARE SUPPLIED BY THE CONTRACTOR, THEY MUST CLOSELY MATCH THE EXISTING BRICKS OR PAVERS AND FIRST BE APPROVED BY THE CITY BEFORE THEY ARE USED. SEE THE DEPARTMENT OF PUBLIC SERVICE APPROVED PRODUCERS / PRODUCTS LISTS THAT CAN BE FOUND AT THE "DOCUMENT LIBRARY ON DEPARTMENT OF PUBLIC SERVICE WEBSITE"
4. SAW CUTTING: ALL PARTIAL BRICKS SHALL BE SAWCUT. FURTHER, NO BRICK WILL BE PERMITTED TO BE CUT, FOR REPLACEMENT, TO A LENGTH LESS THAN 1/2 ITS ORIGINAL LENGTH. THIS MAY REQUIRE SAW CUTTING OF ADJACENT UNDISTURBED BRICK(S).
5. DURING REMOVAL OF THE EXISTING BASE MATERIAL, IT SHALL BE CUT BACK TO AS NEARLY VERTICAL AS POSSIBLE. IF SHEARING OF THE ADJACENT BASE RESULTS, THE CONTRACTOR SHALL REMOVE ADDITIONAL BASE MATERIAL UNTIL A VERTICAL FACE IS ACHIEVED.

SPECIAL NOTES

6. DURING INSTALLATION, THE BRICK IS TO BE RESET IN REASONABLY CLOSE CONFORMITY TO THE PATTERN OF THE EXISTING BRICK PAVEMENT ON A SETTING BED OVER ITEM 305 CONCRETE BASE. THE SETTING BED FOR HISTORICAL BRICK STREETS SHALL CONSIST OF 1 INCH OF SAND; WHEREAS, 3/4-INCH BITUMINOUS SETTING BED FOR NEWER STYLE ROADWAY PAVERS. THE CONCRETE BASE THICKNESS SHALL MATCH THE EXISTING BASE OR A MINIMUM OF 7 INCHES.

6A. HISTORICAL BRICKS WITHOUT SPACING LUGS: THE MAXIMUM WIDTH OF A BRICK JOINT SHALL BE 1/2 INCH. THIS RESTRICTION SHALL ALSO APPLY TO THE JOINT FORMED ADJACENT TO THE PERIMETER OF A REPAIR AREA, WHERE THE ROWS MAY NOT BE PARALLEL TO ONE ANOTHER. ALL JOINTS SHALL BE FILLED WITH POLYMERIC SAND FROM THE APPROVED MATERIALS LIST FOLLOWING MANUFACTURER'S INSTRUCTIONS. THIS MAY REQUIRE MORE THAN ONE APPLICATION. FURTHER, MECHANICAL VIBRATION WILL BE REQUIRED FOR CONSOLIDATION OF DRY MORTAR MIX.

6B. NEWER STYLE ROADWAY PAVERS: INSTALLATION AND MATERIALS SHALL MEET WITH THE REQUIREMENTS OF COLUMBUS SUPPLEMENTAL SPECIFICATION 1524.

SPECIAL NOTES

NOTE 'G' : **TYPE IV ALLEY REPAIR**

FOR ALLEY REPAIRS, THE PAVEMENT REPLACEMENT SHALL CONFORM TO THE TYPE AND THICKNESS OF THE EXISTING PAVEMENT. CHIP AND SEAL TYPE ALLEYS SHALL REQUIRE MATCHING THE EXISTING THICKNESS OF PAVEMENT WITH THE APPROPRIATE COMBINATION OF MATERIALS BASED ON THE SIZE OF THE EXCAVATION. THE MINIMUM PAVEMENT THICKNESS SHALL CONSIST OF 6 INCHES OF ITEM 441 ASPHALT CONCRETE. FINISHED CONCRETE PAVEMENT IS NOT PERMITTED. MATERIALS USED SHALL CONFORM TO THE REQUIREMENTS OF THE CURRENT CMSC.

IF MORE THAN 1/3 OF THE WIDTH OF AN ALLEY IS REMOVED, THE PAVEMENT SHALL BE REPLACED AS PER TYPE 1 AND THEN OVERLAYED OVER THE TOTAL WIDTH OF PAVEMENT AND LENGTH OF TRENCH.

NOTE 'H' : **ITEM 912 - COMPACTED GRANULAR MATERIAL**

THIS METHOD OF BACKFILL CAN ONLY BE USED WITH FULL TIME CITY INSPECTION. AN INSPECTION FEE MUST BE POSTED WHEN THE PERMIT IS ISSUED.

NOTE 'I' : **CONCRETE BASE OR FULL DEPTH CONCRETE PAVEMENT**

FULL DEPTH CONCRETE PAVEMENT

IF THE UTILITY TRENCH CUT IS WITHIN 6 FT OF A TRANSVERSE OR LONGITUDINAL JOINT, THE LIMITS OF THE REPAIR SHALL EXTEND TO THE JOINT. THIS MAY REQUIRE THE ENTIRE PANEL TO BE REPLACED. AT A MINIMUM, THE LIMITS OF THE CONCRETE REPAIR SHALL EXTEND 1 FT BEYOND THE LIMITS OF THE TRENCH.

IF MAINTENANCE OF TRAFFIC REQUIREMENTS ALLOW FOR SUFFICIENT CURING TIME SO THAT FAST SETTING CONCRETE IS NOT NEEDED, STANDARD CONCRETE BASE OR FULL DEPTH CONCRETE PAVEMENT MAY BE PLACED AS PER CMSC ITEM 255. THIS OPTION MUST BE NOTED ON THE PERMIT APPLICATION AND APPROVED BY THE CITY OF COLUMBUS. THE ENTIRE IMPACTED CONCRETE PANEL SHALL BE REPLACED WHEN THE UTILITY CUT IS LOCATED IN THE DOWNTOWN BUSINESS DISTRICT.

PAVEMENT WITH A CONCRETE BASE THE NEW CONCRETE BASE THICKNESS SHALL MATCH THE EXISTING (7 INCHES MINIMUM) AND IT SHALL BE PLACED TO THE LEVEL OF THE ADJACENT CONCRETE BASE WITH 1-1/2 INCHES OF ITEM 441 ASPHALT CONCRETE OVERLAY. LANE WIDTH RESURFACING REQUIREMENTS OF TYPE 1 STILL APPLY.

NOTE 'J' : **MINIMUM TRENCH RESTORATION WIDTH**

THE TRENCH WIDTH FOR SMALL PIPES AND CONDUITS SHALL BE OF SUFFICIENT WIDTH TO ALLOW FOR THE PROPER PLACEMENT OF THE BACKFILL MATERIAL. THE PAVEMENT PORTION OF THE TRENCH SHALL BE A MINIMUM OF 2 FT IN WIDTH. THIS IS TO ALLOW FOR THE PROPER COMPACTION OF THE ASPHALT PAVEMENT. IF THE TRENCH FOR PLACING CONDUIT IS NARROWER THAN 2 FT THEN THE PAVEMENT PORTION SHALL BE CUT BACK TO PROVIDE THE 2 FT MINIMUM FOR PAVING OPERATIONS.

NOTE 'K' : **TEMPORARY CONCRETE PAVEMENT**

CONCRETE MAY BE USED AS A PAVEMENT REPAIR OPTION AND A TEMPORARY PAVEMENT SURFACE FOR TYPE 1 PAVEMENT REPAIR IF APPROVED BY THE CITY. THE CONCRETE SHALL BE PLACED PER CMSC ITEM 255 AND FOLLOW THE REQUIREMENTS OF TYPE V PAVEMENT REPAIR. 1-1/2 INCHES OF ITEM 441 ASPHALT OVERLAY WILL BE REQUIRED OVER THE CONCRETE WHEN WORK IS COMPLETED. THIS OPTION MUST BE NOTED ON THE PERMIT APPLICATION APPROVED BY THE CITY OF COLUMBUS.

NOTE 'L' : **SURFACE REPAIR SHAPE** (SEE SHEET 11)

THE SURFACE REPAIR OF ALL IRREGULAR-SHAPED EXCAVATIONS SHALL ALWAYS BE A RECTANGLE WITH PARALLEL SIDES THAT ARE PERPENDICULAR TO THE DIRECTION OF TRAVEL OF THE ROADWAY.

ACCEPTABLE UTILITY CUT REPAIRS

EXCAVATION EXCEEDING 100' IN LENGTH LOCATED WITHIN LANE

WHEN AN EXCAVATION EXCEEDS 100 FT IN LENGTH, THE REPAIR SHALL INCLUDE ITEM 254 PAVEMENT PLANING OF A FULL LANE WIDTH (OR ANY OTHER LANE WIDTH AS DIRECTED BY THE DEPARTMENT OF PUBLIC SERVICE) TO A DEPTH OF 1-1/2 INCHES FOR THE ENTIRE LENGTH OF THE EXCAVATION. THE PLANED AREA SHALL BE THOROUGHLY CLEANED AND DRY, THEN TACKED USING ITEM 407 TACK COAT MATERIAL PRIOR TO PLACING AND COMPACTING APPROVED ASPHALT CONCRETE WITH A PAVER IN ACCORDANCE WITH CURRENT CITY STANDARD SPECIFICATIONS. ITEM 423 CRACK SEALING, TYPE II OR III, SHALL BE APPLIED TO EXPOSED JOINTS ONCE THE PAVING OPERATION HAS BEEN COMPLETED.

SEE NOTE "C"

NOT ACCEPTABLE

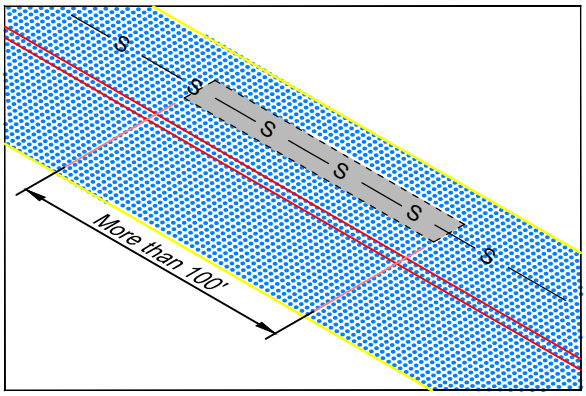

ACCEPTABLE

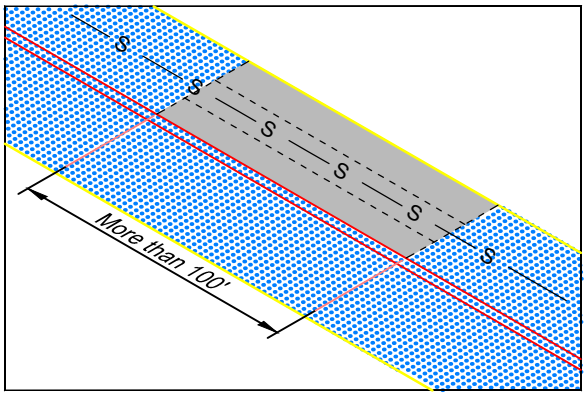

FOR AN EXCAVATION IN A SINGLE LANE, PERFORM A FULL-LANE-WIDTH PLANE AND REPAIR.

EXCAVATION EXCEEDING 100' IN LENGTH BETWEEN OR CROSSING LANES

WHEN AN EXCAVATION CROSSES LANES, ALL AFFECTED LANES SHALL REQUIRE PLANING AND RESURFACING AS DESCRIBED ABOVE. THIS WORK SHALL INCLUDE ALL OF THE PAVEMENT AREA WITHIN THE AFFECTED LANES FOR THE LIMITS OF THE EXCAVATION.

SEE NOTE "C"

NOT ACCEPTABLE

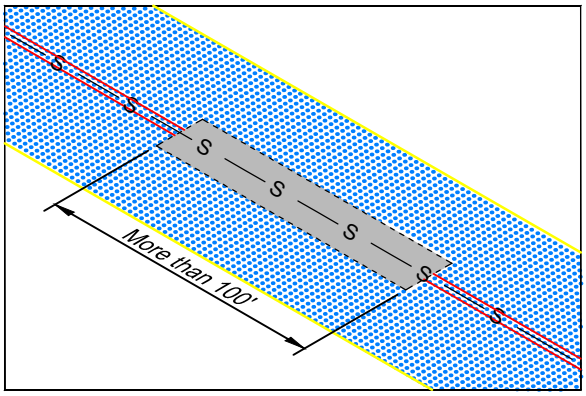

ACCEPTABLE

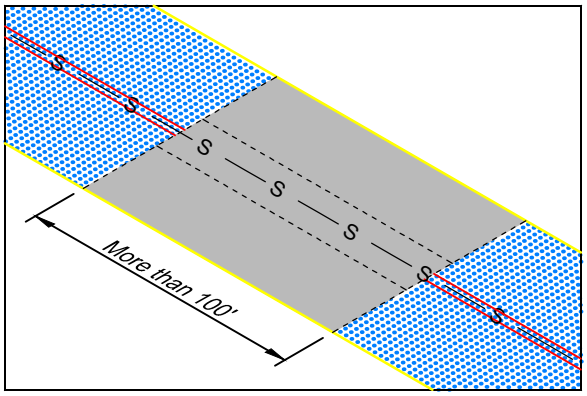

FOR AN EXCAVATION IN MULTIPLE LANES, PERFORM A FULL-LANE-WIDTH PLANE AND REPAIR FOR ALL IMPACTED LANES.

LEGEND

- EXISTING PAVEMENT
- NEW PAVEMENT REPAIR

NOTE:
EXCAVATIONS ARE CONCEPTUAL ONLY. SEE DETAILED CROSS SECTION AND PROFILE SHEETS FOR CONSTRUCTION PROCEDURES AND WIDTHS.

PAVEMENT & UTILITY CUT REPAIR STANDARDS

CITY OF COLUMBUS, OHIO
DEPARTMENT OF PUBLIC SERVICE
DIVISION OF DESIGN AND CONSTRUCTION

STD DWG
1441

4/22/2019

ACCEPTABLE UTILITY CUT REPAIRS

UTILITY EXCAVATIONS CROSSING ONE LANE WITHIN 100'

WHEN EXCAVATION WORK FOR LATERALS CROSSES A LANE AT A FREQUENCY OF 2 OR MORE LATERAL EXCAVATIONS WITHIN 100 FEET OF EACH OTHER, THE REPAIR SHALL INCLUDE ITEM 254 PAVEMENT PLANING FOR THE FULL LANE WIDTH TO A DEPTH OF 1- 1/2 INCHES AND FOR A MINIMUM OF 2 FEET BEYOND THE FURTHEST LATERAL EXCAVATIONS. THE PLANED AREA SHALL BE THOROUGHLY CLEANED AND DRY, THEN TACKED USING ITEM 407 TACK COAT MATERIAL PRIOR TO PLACING AND COMPACTING APPROVED ASPHALT CONCRETE WITH A PAVER IN ACCORDANCE WITH CURRENT CITY STANDARD SPECIFICATIONS. ITEM 423 CRACK SEALING, TYPE II OR III, SHALL BE APPLIED TO EXPOSED JOINTS ONCE THE PAVING OPERATION HAS BEEN COMPLETED.

SEE NOTE "C"

NOT ACCEPTABLE

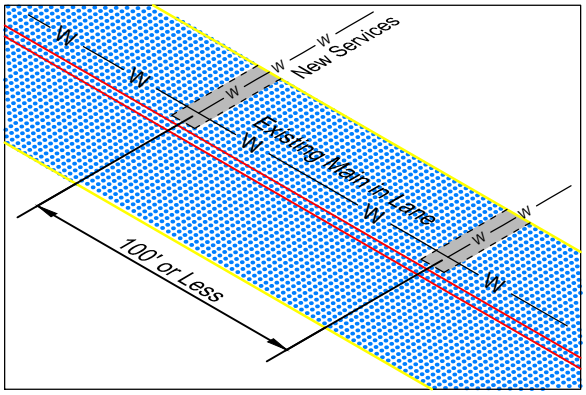

ACCEPTABLE

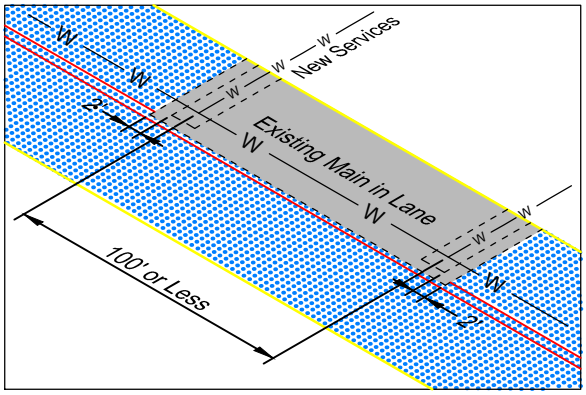

FOR MULTIPLE EXCAVATIONS WITHIN 100', PERFORM A FULL-LANE-WIDTH PLANE AND REPAIR.

UTILITY EXCAVATIONS CROSSING MULTIPLE LANES WITHIN 100'

WHEN EXCAVATION WORK CROSSES MULTIPLE LANES, ALL AFFECTED LANES SHALL REQUIRE PLANING AND RESURFACING AS DESCRIBED ABOVE. THIS WORK SHALL INCLUDE ALL OF THE PAVEMENT AREA WITHIN THE AFFECTED LANES FOR THE LIMITS OF THE LATERAL EXCAVATIONS.

SEE NOTE "C"

NOT ACCEPTABLE

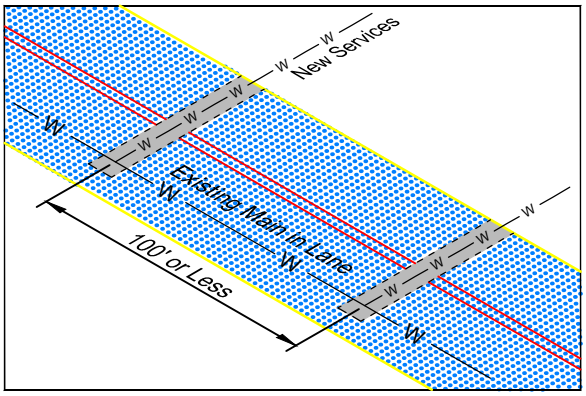

ACCEPTABLE

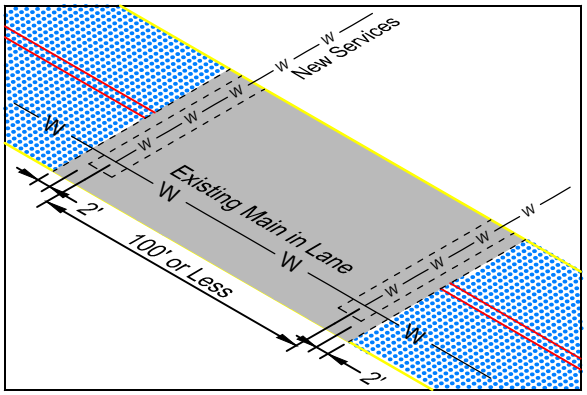

FOR MULTIPLE EXCAVATIONS WITHIN 100' IN MULTIPLE LANES, PERFORM A FULL-LANE-WIDTH PLANE AND REPAIR FOR ALL IMPACTED LANES.

LEGEND

EXISTING PAVEMENT

NEW PAVEMENT REPAIR

NOTE:
EXCAVATIONS ARE CONCEPTUAL ONLY. SEE DETAILED CROSS SECTION AND PROFILE SHEETS FOR CONSTRUCTION PROCEDURES AND WIDTHS.

PAVEMENT & UTILITY CUT REPAIR STANDARDS

CITY OF COLUMBUS, OHIO
DEPARTMENT OF PUBLIC SERVICE
DIVISION OF DESIGN AND CONSTRUCTION

STD DWG
1441

4/22/2019

ACCEPTABLE UTILITY CUT REPAIRS

SEE NOTE "C"

NOT ACCEPTABLE

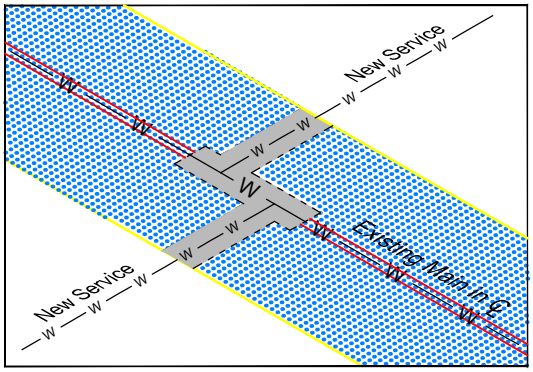

ACCEPTABLE

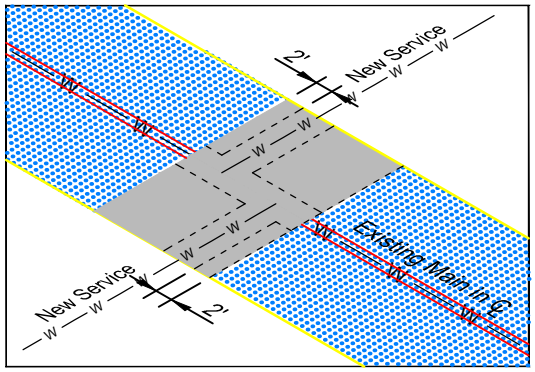

IRREGULAR SHAPES - SEE NOTE "L"

NOT ACCEPTABLE

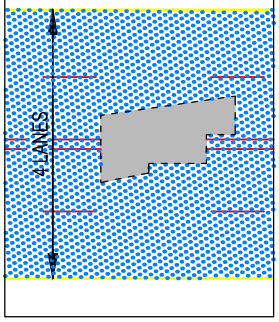

ACCEPTABLE

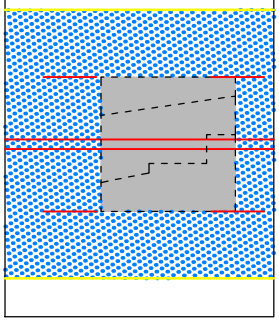

NOT ACCEPTABLE

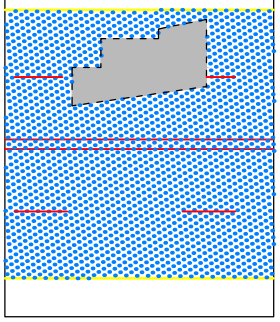

ACCEPTABLE

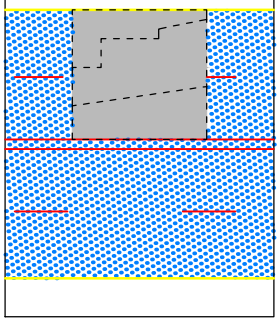

NOT ACCEPTABLE

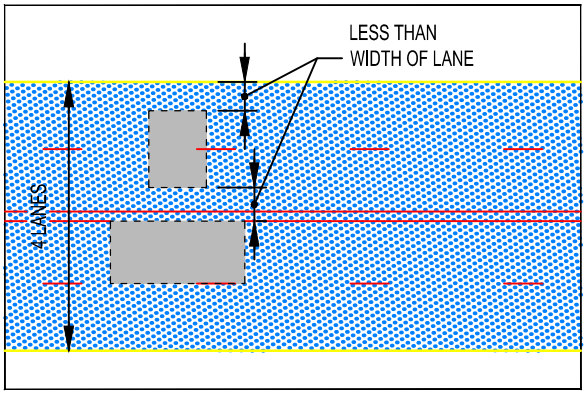

ACCEPTABLE

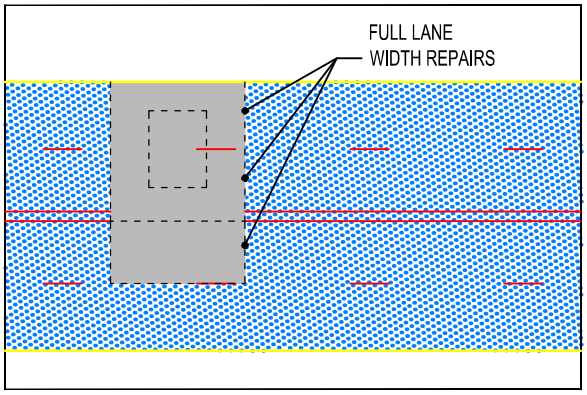

LEGEND

EXISTING PAVEMENT

NEW PAVEMENT REPAIR

NOTE:
EXCAVATIONS ARE CONCEPTUAL ONLY. SEE DETAILED CROSS SECTION AND PROFILE SHEETS FOR CONSTRUCTION PROCEDURES AND WIDTHS.

PAVEMENT & UTILITY CUT REPAIR STANDARDS

CITY OF COLUMBUS, OHIO
DEPARTMENT OF PUBLIC SERVICE
DIVISION OF DESIGN AND CONSTRUCTION

STD DWG
1441

4/22/2019

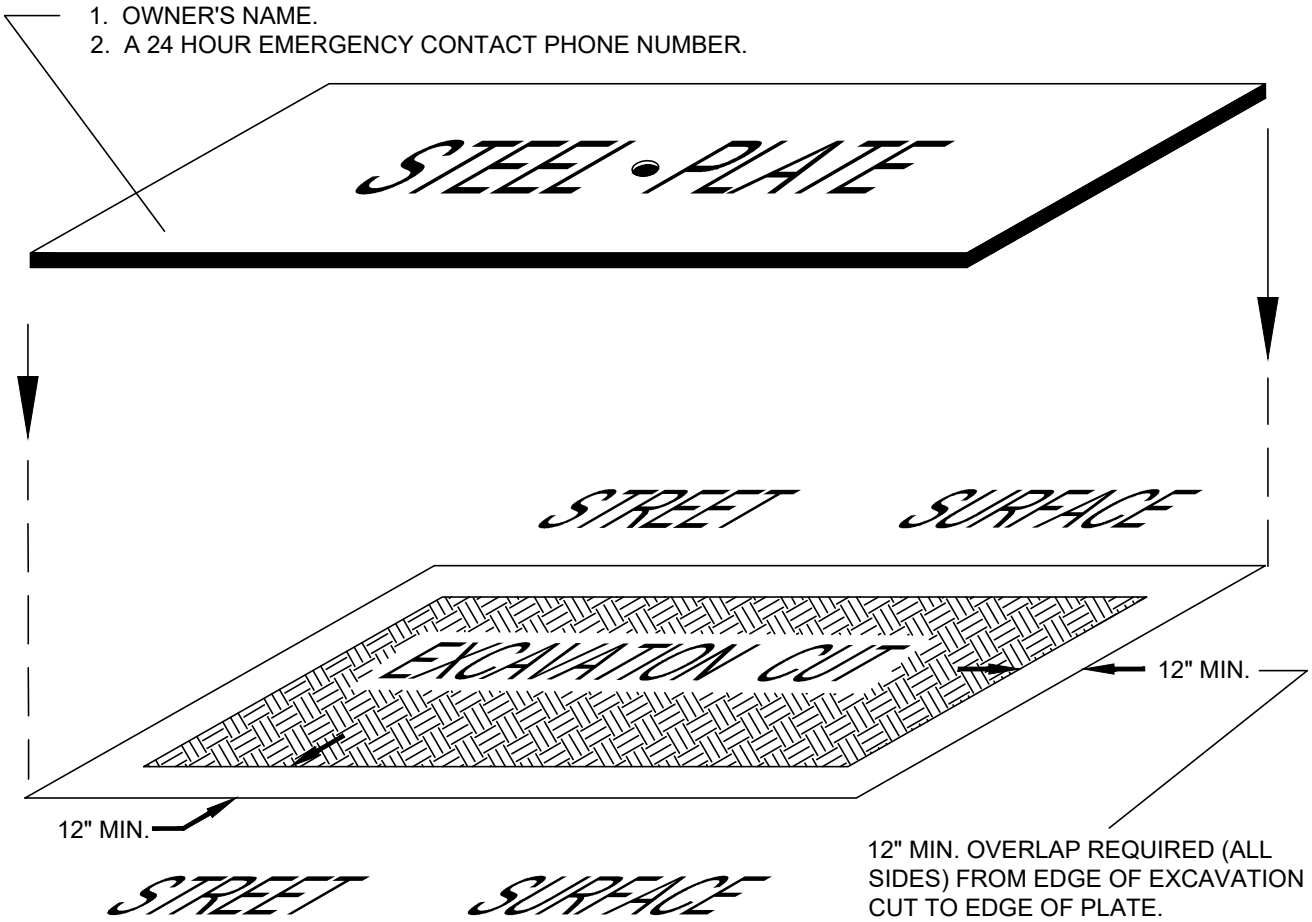

ALL STEEL PLATES MUST HAVE THE FOLLOWING INFORMATION CLEARLY AND LEGIBLY 'ETCHED' INTO THEIR TOP SURFACE:

1. OWNER'S NAME.
2. A 24 HOUR EMERGENCY CONTACT PHONE NUMBER.
3. CONTACT CITY OF COLUMBUS DIVISION OF INFRASTRUCTURE MANAGEMENT TO REPORT LOCATION OF STEEL PLATE (614) 645-5550

MINIMUM THICKNESS OF STEEL PLATES	
SIZE OF PLATE	THICKNESS
4' x 4'	1/2"
4' x 6'	3/4"
LARGER	1"

NO STEEL PINS ARE PERMITTED.

SEE SHEET 13 FOR SIGNING REQUIREMENTS.

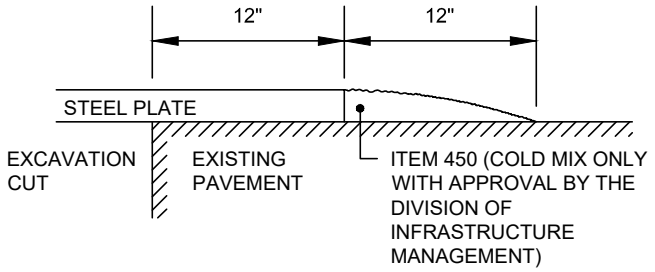

STEEL PLATE REQUIREMENTS

PAVEMENT & UTILITY CUT REPAIR STANDARDS

CITY OF COLUMBUS, OHIO
DEPARTMENT OF PUBLIC SERVICE
DIVISION OF DESIGN AND CONSTRUCTION

STD DWG
1441
4/22/2019
SHT 12 OF 13

SIGNS ARE TO BE 36"x36" FOR RESIDENTIAL AND DOWNTOWN AREAS AND 48"x48" ON MULTI-LANE, HIGH SPEED (45 MPH OR GREATER) ROADWAYS.

SIGN COC-327 (R/L) IS REQUIRED AT ALL PLATE LOCATIONS. SIGN COC-328 IS REQUIRED WHEN POSTED SPEED IS 35 MPH OR GREATER.

SIGNS SHOULD BE PLACED IN ALL DIRECTIONS THAT ARE AFFECTED. SIGN SPACING SHALL INCREASE TO 250' WHEN SPEED EXCEEDS 45 MPH.

SIGNS SHOULD BE DUAL MOUNTED ON MULTI-LANE, ONE-WAY ROADWAYS.

ALL SIGNS SHALL BE MOUNTED IN ACCORDANCE WITH THE OHIO MANUAL OF UNIFORM TRAFFIC CONTROL DEVICES (OMUTCD).

SIGNS SHALL NOT BE PLACED IN A MANNER THAT WOULD BLOCK PARKING, BIKE LANES, OR RESTRICT A PEDESTRIAN FROM USING ANY SIDEWALK INCLUDING CURB RAMPS. PAR SHALL BE MAINTAINED AT ALL TIMES.

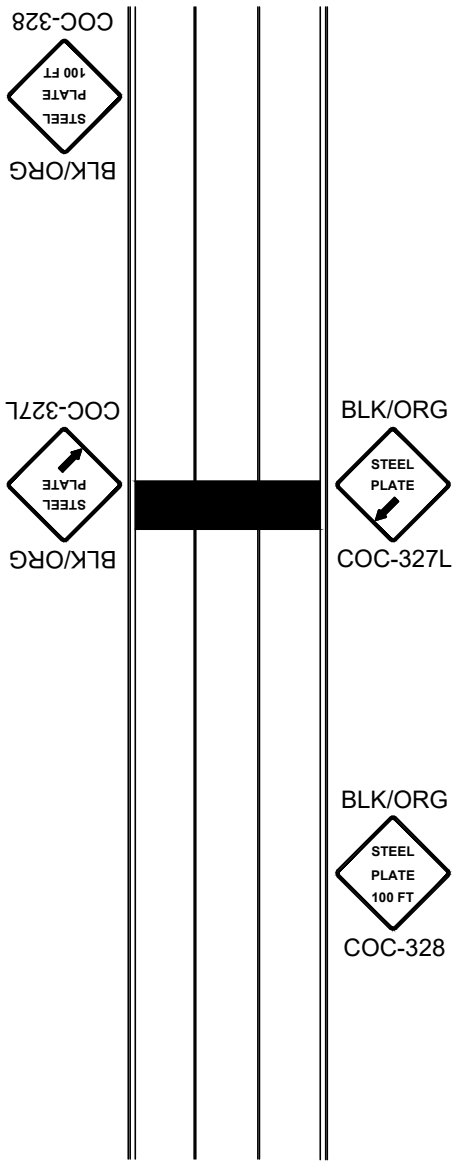

STEEL PLATE REQUIREMENTS

PAVEMENT & UTILITY CUT REPAIR STANDARDS

CITY OF COLUMBUS, OHIO
DEPARTMENT OF PUBLIC SERVICE
DIVISION OF DESIGN AND CONSTRUCTION

STD DWG
1441

4/22/2019

SHT 13 OF 13

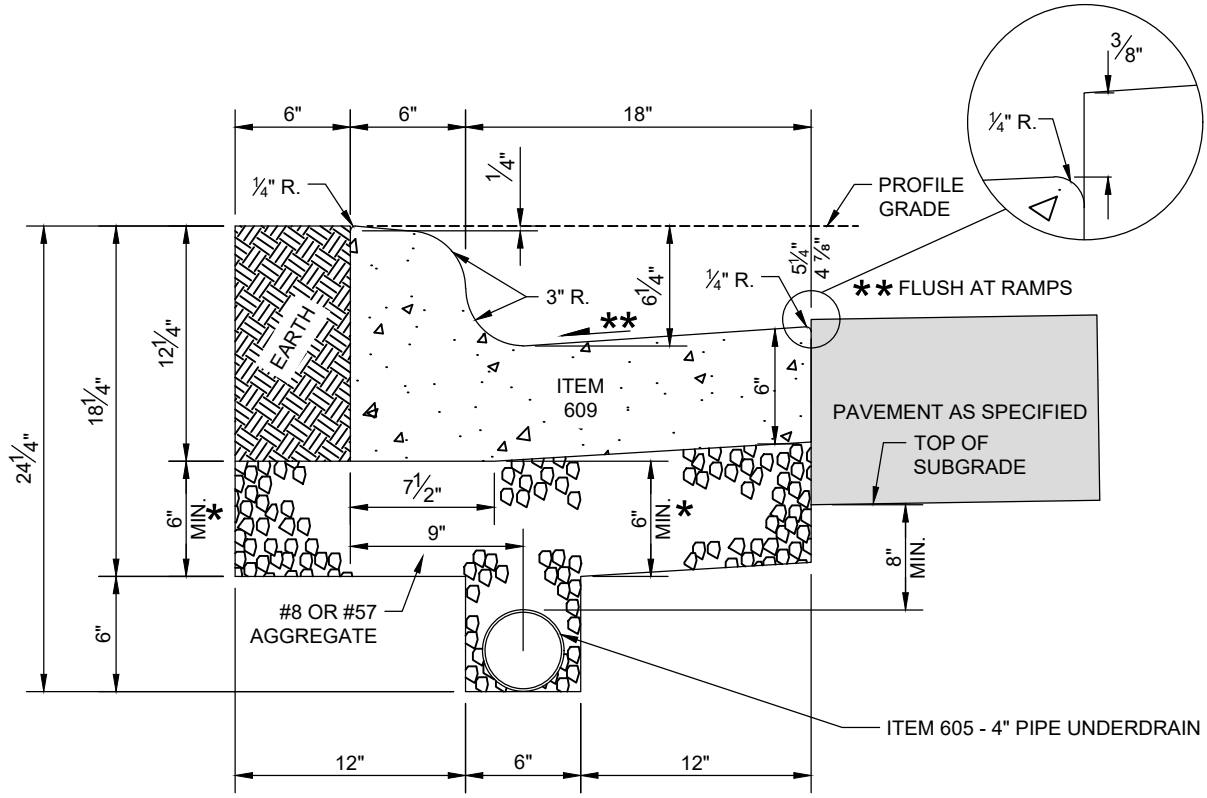

* CURB AND GUTTER AGGREGATE COURSE-WHERE THE ROADWAY PAVEMENT HAS AGGREGATE BASE, MATCH THE BOTTOM OF THE CURB AND GUTTER AGGREGATE COURSE TO THE TOP OF SUBGRADE. ENSURE ROADWAY SUB BASE MEETS UNDERDRAIN AGGREGATE.

** AT CURB RAMP LOCATIONS, THE GUTTER SLOPE SHALL NOT EXCEED 4.7%. TRANSITION GUTTER OVER 3' TO MATCH EXISTING CURB & GUTTER SLOPE. THE PAVEMENT SHALL BE FLUSH AT THE GUTTER IN FRONT OF CURB RAMPS. CURB RAMPS SHALL BE BUILT PER STD DWG 2319.

IF THE TOP OF THE SUBGRADE IS BELOW THE BOTTOM OF THE CURB, THE UNDERDRAIN SHALL BE ADJUSTED TO KEEP THE TOP OF THE UNDERDRAIN AT LEAST 8" BELOW THE TOP OF THE SUBGRADE; AGGREGATE DEPTH BETWEEN BOTTOM OF CURB AND TOP OF UNDERDRAIN MAY VARY IF THIS OCCURS.

SUBGRADE COMPACTION SHALL BE COMPLETED BEFORE UNDERDRAIN INSTALLATION.

WHEN A CURB AND GUTTER INLET IS INSTALLED, THE TOP OF THE CASTING SHALL BE THE SAME AS THE TOP OF CURB ELEVATION. THE EDGE OF PAVEMENT SHALL BE 3/8" HIGHER THAN THE GRATE WHEREVER THEY MEET.

FOR REPLACEMENT WORK, THE CURB SHALL BE REMOVED AT AN EXISTING JOINT OR NO CLOSER THAN 5 FEET FROM AN EXISTING JOINT.

1/2" EXPANSION MATERIAL WILL BE INSTALLED BEHIND THE CURB WHEN A CONCRETE WALK, DRIVE, OR OTHER ITEM IS ADJOINING IT.

WHEN CONNECTING TO AN EXISTING COMBINATION CURB AND GUTTER, TRANSITION THE GUTTER PAN AS REQUIRED, OVER A DISTANCE OF 10 FEET MAXIMUM, TO MAINTAIN POSITIVE DRAINAGE.

1.26 C.F. CONCRETE PER L.F.

COMBINATION CURB & GUTTER, TYPE STANDARD

CITY OF COLUMBUS, OHIO
DEPARTMENT OF PUBLIC SERVICE
DIVISION OF DESIGN AND CONSTRUCTION

CITY ENGINEER

STD DWG
2010

3/30/2018

SHT 1 OF 1

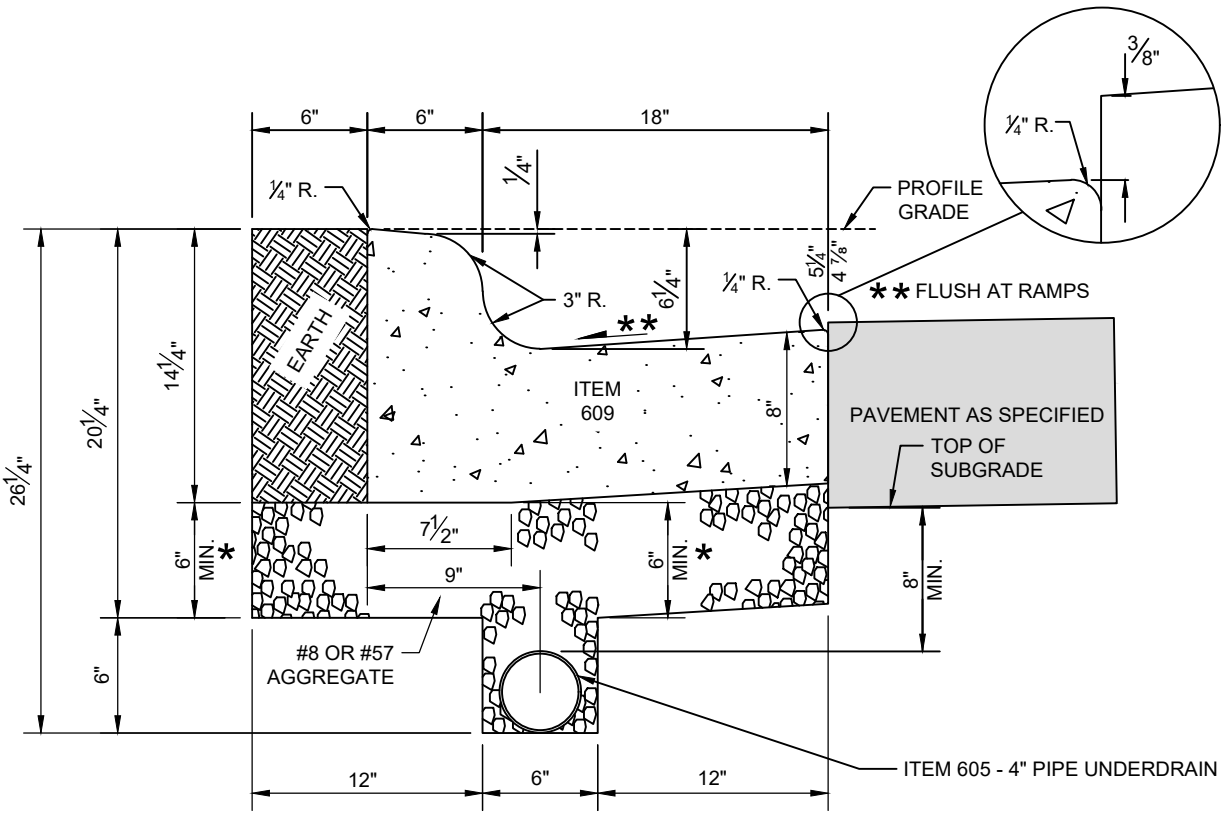

* CURB AND GUTTER AGGREGATE COURSE-WHERE THE ROADWAY PAVEMENT HAS AGGREGATE BASE, MATCH THE BOTTOM OF THE CURB AND GUTTER AGGREGATE COURSE TO THE TOP OF SUBGRADE. ENSURE ROADWAY SUB BASE MEETS UNDERDRAIN AGGREGATE.

** AT CURB RAMP LOCATIONS, THE GUTTER SLOPE SHALL NOT EXCEED 4.7%. TRANSITION GUTTER OVER 3' TO MATCH EXISTING CURB & GUTTER SLOPE. THE PAVEMENT SHALL BE FLUSH AT THE GUTTER IN FRONT OF CURB RAMPS. CURB RAMPS SHALL BE BUILT PER STD DWG 2319.

IF THE TOP OF THE SUBGRADE IS BELOW THE BOTTOM OF THE CURB, THE UNDERDRAIN SHALL BE ADJUSTED TO KEEP THE TOP OF THE UNDERDRAIN AT LEAST 8" BELOW THE TOP OF THE SUBGRADE; AGGREGATE DEPTH BETWEEN BOTTOM OF CURB AND TOP OF UNDERDRAIN MAY VARY IF THIS OCCURS.

SUBGRADE COMPACTION SHALL BE COMPLETED BEFORE UNDERDRAIN INSTALLATION.

WHEN A CURB AND GUTTER INLET IS INSTALLED, THE TOP OF THE CASTING SHALL BE THE SAME AS THE TOP OF CURB ELEVATION. THE EDGE OF PAVEMENT SHALL BE 3/8" HIGHER THAN THE GRATE WHEREVER THEY MEET.

FOR REPLACEMENT WORK, THE CURB SHALL BE REMOVED AT AN EXISTING JOINT OR NO CLOSER THAN 5 FEET FROM AN EXISTING JOINT.

1/2" EXPANSION MATERIAL WILL BE INSTALLED BEHIND THE CURB WHEN A CONCRETE WALK, DRIVE, OR OTHER ITEM IS ADJOINING IT.

WHEN CONNECTING TO AN EXISTING COMBINATION CURB AND GUTTER, TRANSITION THE GUTTER PAN AS REQUIRED, OVER A DISTANCE OF 10 FEET MAXIMUM, TO MAINTAIN POSITIVE DRAINAGE.

1.59 C.F. CONCRETE PER L.F.

COMBINATION CURB & GUTTER, TYPE SPECIAL 8"

CITY OF COLUMBUS, OHIO
DEPARTMENT OF PUBLIC SERVICE
DIVISION OF DESIGN AND CONSTRUCTION

CITY ENGINEER

STD DWG
2020

3/30/2018

SHT 1 OF 1

NOTE: ALL MEASUREMENTS ARE FROM THE STRINGLINE

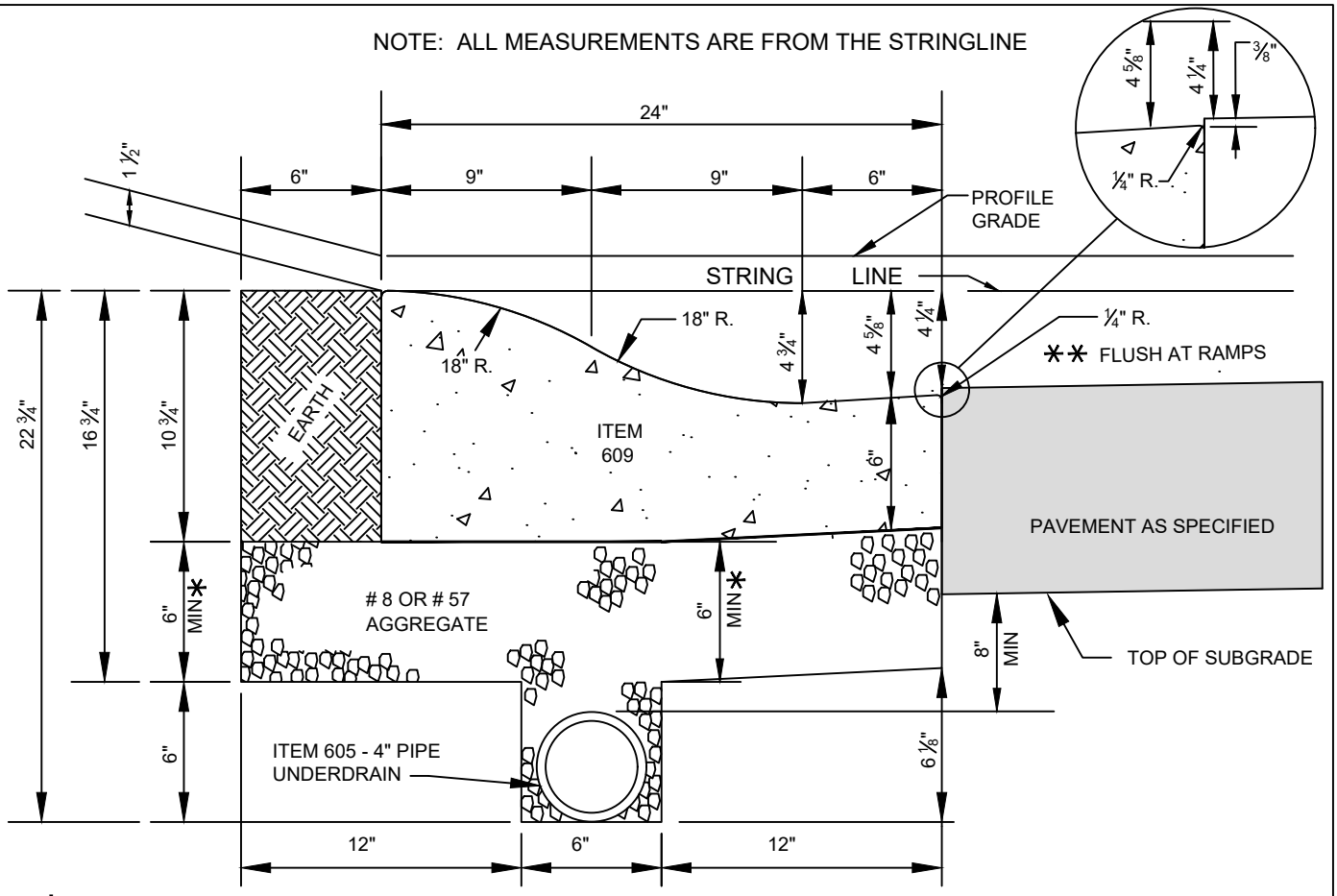

* CURB AND GUTTER AGGREGATE COURSE-WHERE THE ROADWAY PAVEMENT HAS AGGREGATE BASE, MATCH THE BOTTOM OF THE CURB AND GUTTER AGGREGATE COURSE TO THE TOP OF SUBGRADE. ENSURE ROADWAY SUB BASE MEETS UNDERDRAIN AGGREGATE.

** AT CURB RAMP LOCATIONS, THE GUTTER SLOPE SHALL NOT EXCEED 4.7%. TRANSITION GUTTER OVER 3' TO MATCH EXISTING CURB & GUTTER SLOPE. THE PAVEMENT SHALL BE FLUSH AT THE GUTTER IN FRONT OF CURB RAMPS. CURB RAMPS SHALL BE BUILT PER STD DWG 2319.

IF THE TOP OF THE SUBGRADE IS BELOW THE BOTTOM OF THE CURB, THE UNDERDRAIN SHALL BE ADJUSTED TO KEEP THE TOP OF THE UNDERDRAIN AT LEAST 8" BELOW THE TOP OF THE SUBGRADE; AGGREGATE DEPTH BETWEEN BOTTOM OF CURB AND TOP OF UNDERDRAIN MAY VARY IF THIS OCCURS.

SUBGRADE COMPACTION SHALL BE COMPLETED BEFORE UNDERDRAIN INSTALLATION.

WHEN A CURB AND GUTTER INLET IS INSTALLED, THE TOP OF THE CASTING SHALL BE THE SAME AS THE TOP OF CURB ELEVATION. THE EDGE OF PAVEMENT SHALL BE 3/8" HIGHER THAN THE GRATE WHEREVER THEY MEET.

FOR REPLACEMENT WORK, THE CURB SHALL BE REMOVED AT AN EXISTING JOINT OR NO CLOSER THAN 5 FEET FROM AN EXISTING JOINT.

1/2" EXPANSION MATERIAL WILL BE INSTALLED BEHIND THE CURB WHEN A CONCRETE WALK, DRIVE, OR OTHER ITEM IS ADJOINING IT.

WHEN CONNECTING TO AN EXISTING COMBINATION CURB AND GUTTER, TRANSITION THE GUTTER PAN AS REQUIRED, OVER A DISTANCE OF 10 FEET MAXIMUM, TO MAINTAIN POSITIVE DRAINAGE.

1.33 C.F. CONCRETE PER L.F.

COMBINATION CURB & GUTTER, TYPE MOUNTABLE

CITY OF COLUMBUS, OHIO
DEPARTMENT OF PUBLIC SERVICE
DIVISION OF DESIGN AND CONSTRUCTION

CITY ENGINEER

STD DWG
2030

3/30/2018

SHT 1 OF 1

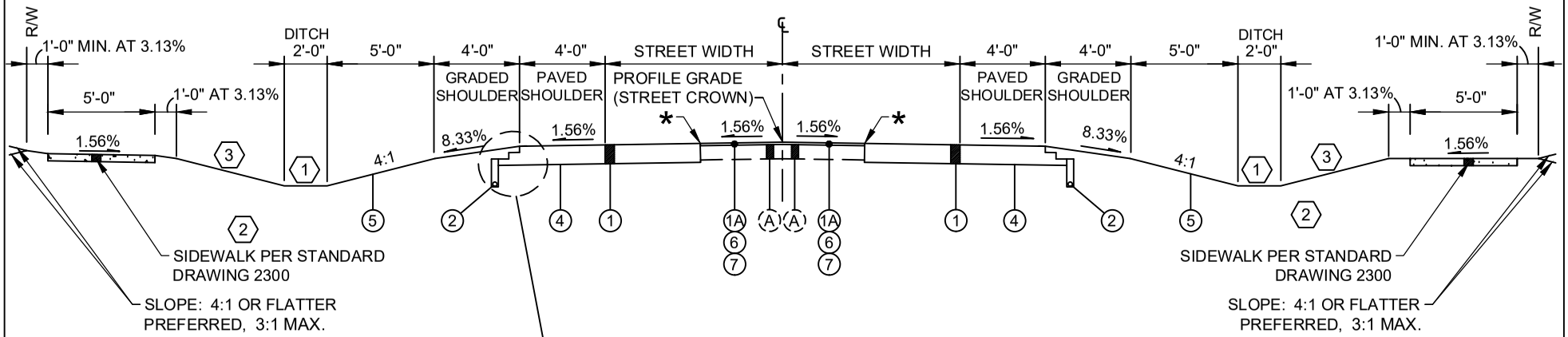

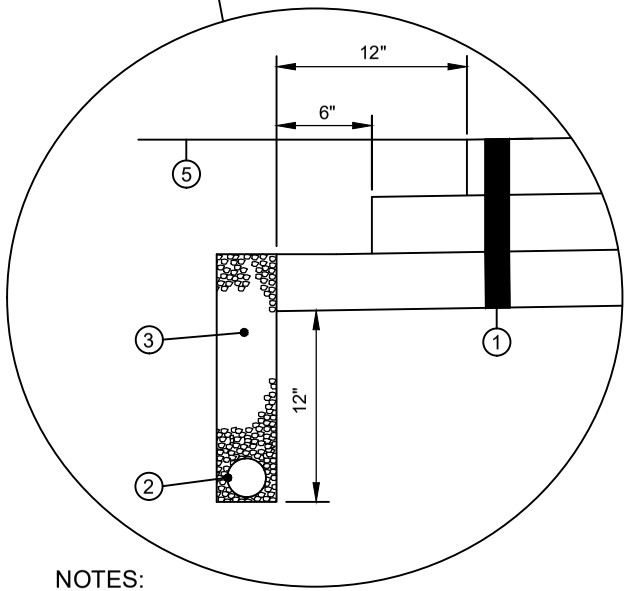

NOTES:

1. DITCH DESIGN PER CITY STORMWATER DRAINAGE MANUAL.
2. PUBLIC ACCESS EASEMENT REQUIRED FOR ANY WALK OUTSIDE OF R/W.
3. SLOPE: 4:1 PREFERRED
   3:1 MAX

* PLACE LONGITUDINAL WIDENING JOINT AT A LOCATION WITH SOUND PAVEMENT AND NOT LOCATED WITHIN THE WHEEL PATH FOR THE MAJORITY OF THE WIDENING. THE WHEEL PATH IS DEFINED BY EXHIBIT (A) & EXHIBIT (B) SEE SHEET (2) AND (3).

(A) EXISTING PAVEMENT

(1) PAVEMENT DESIGN FOR WIDENING SHALL BE PER CITY OF COLUMBUS NON-RESIDENTIAL STREET PAVEMENT DESIGN POLICY. PAVEMENT SHALL BE EQUAL TO OR GREATER THAN EXISTING PAVEMENT TO PROVIDE POSITIVE DRAINAGE OF SUBGRADE.

(1A) ITEM 441 - ASPHALT CONCRETE, SURFACE COURSE

(2) ITEM 605 - 4" PIPE UNDERDRAIN

(3) NO. 8 OR NO. 57 AGGREGATE

(4) ITEM 204 - SUBGRADE COMPACTION

(5) ITEM 659 - SEEDING AND MULCHING

(6) ITEM 254 - 1½" PAVEMENT PLANING

(7) ITEM 407 - TACK COAT

WIDENING UNCURBED SECTION SIDE DITCH

CITY OF COLUMBUS, OHIO
DEPARTMENT OF PUBLIC SERVICE
DIVISION OF DESIGN AND CONSTRUCTION

CITY ENGINEER

STD DWG 2130

7/01/20

SHT 1 OF 3

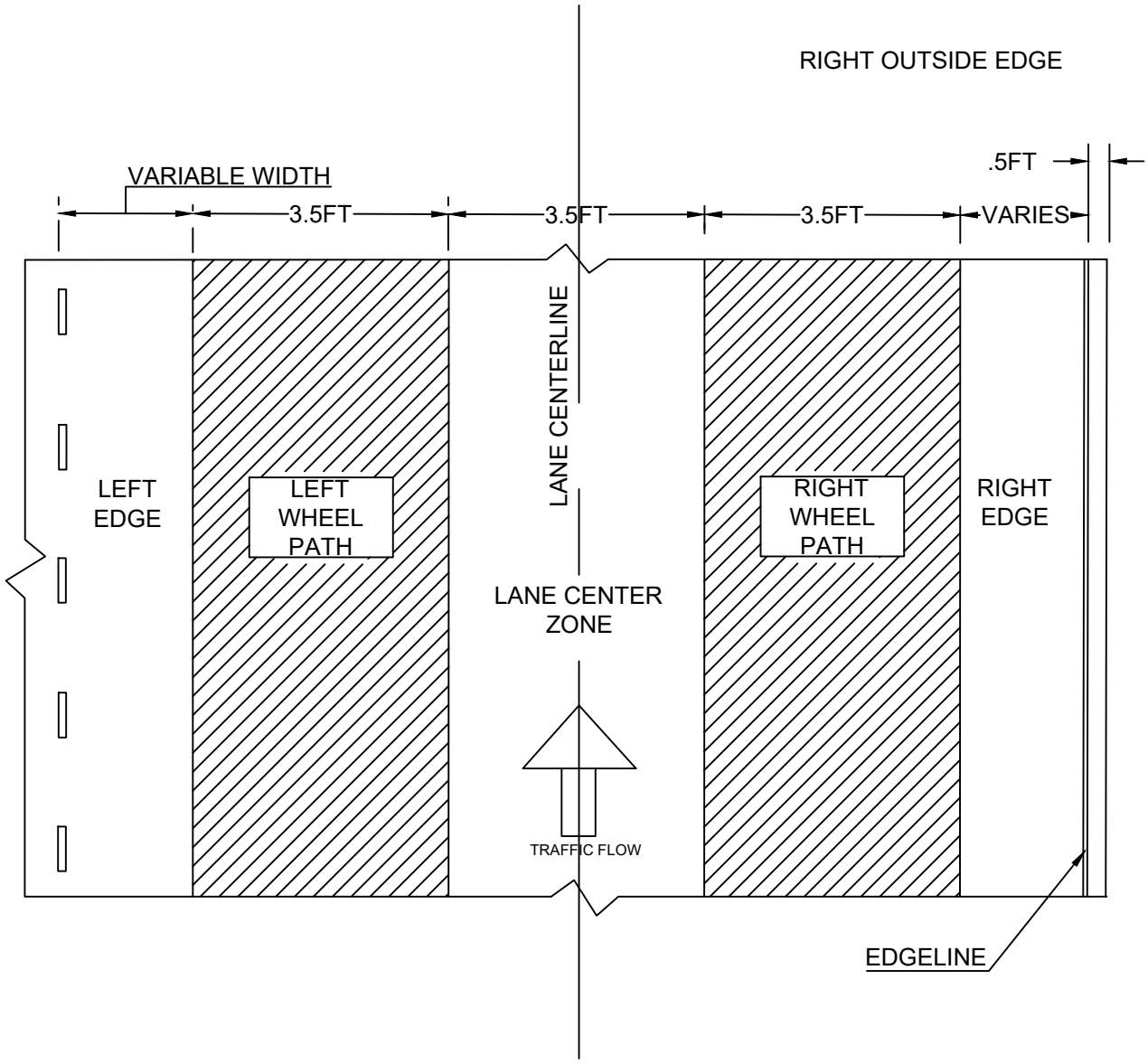

EXHIBIT A

WIDENING UNCURBED SECTION SIDE DITCH

CITY OF COLUMBUS, OHIO DEPARTMENT OF PUBLIC SERVICE DIVISION OF DESIGN AND CONSTRUCTION	STD DWG 2130
	07/01/20
CITY ENGINEER	SHT 2 OF 3

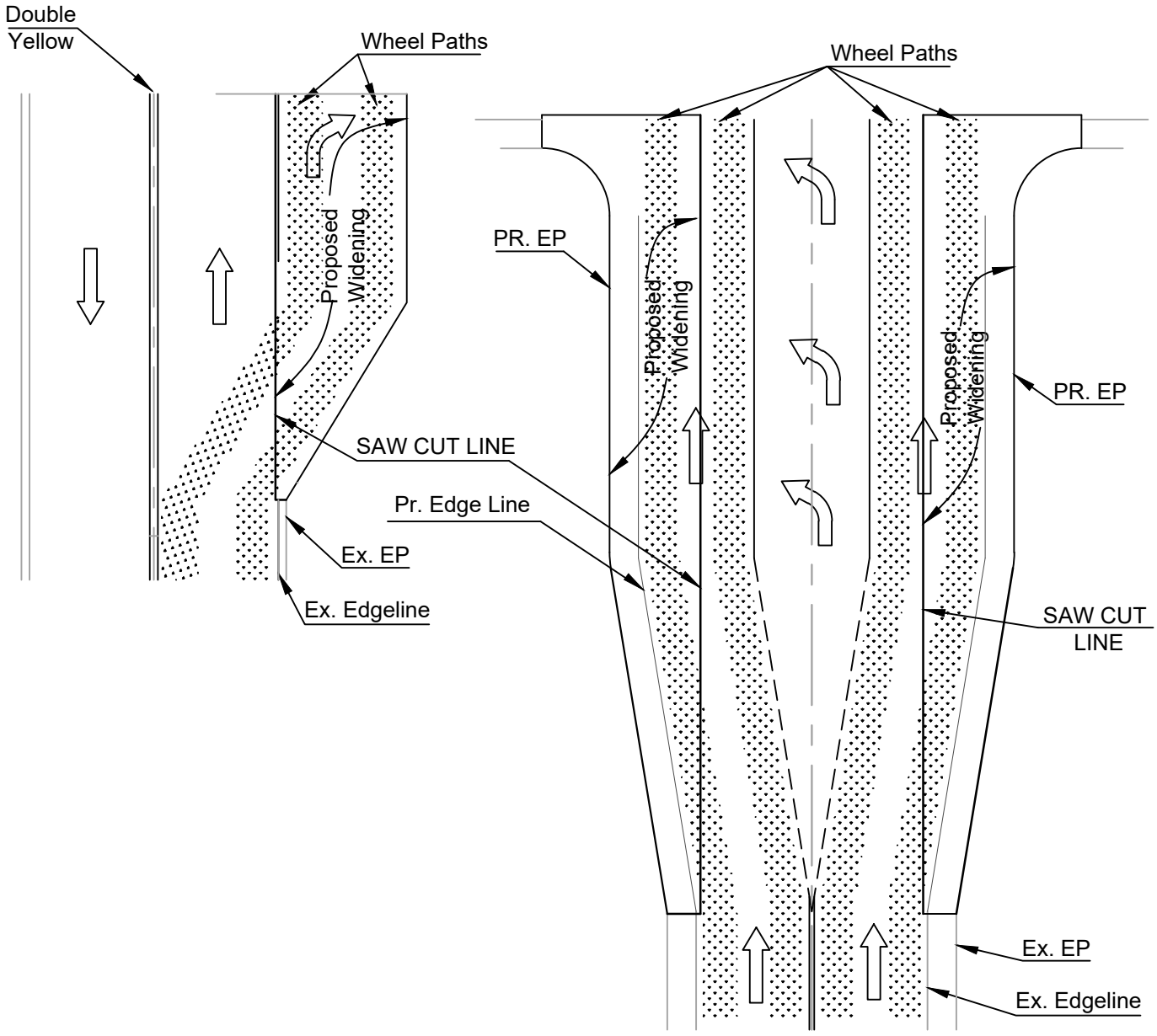

EXHIBIT B

WIDENING
UNCURBED SECTION
SIDE DITCH

CITY OF COLUMBUS, OHIO DEPARTMENT OF PUBLIC SERVICE DIVISION OF DESIGN AND CONSTRUCTION	STD DWG 2130
	07/01/20
CITY ENGINEER	SHT 3 OF 3

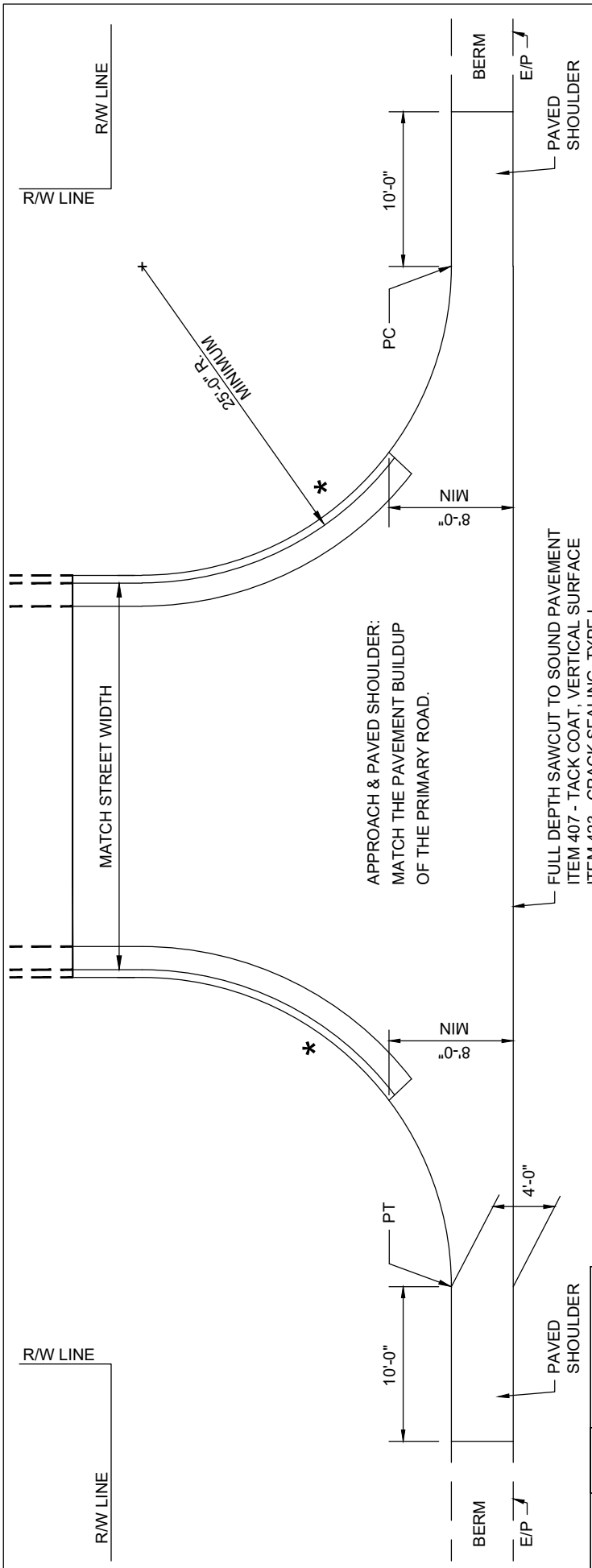

* TAPER CURB HEIGHT FROM 6" TO 0" IN 10 FEET.

CURBED SECTION APPROACH TO NON-CURBED SECTION

CITY OF COLUMBUS, OHIO
DEPARTMENT OF PUBLIC SERVICE
DIVISION OF DESIGN AND CONSTRUCTION

CITY ENGINEER

STD DWG
2145

3/30/2018

SHT 1 OF 1

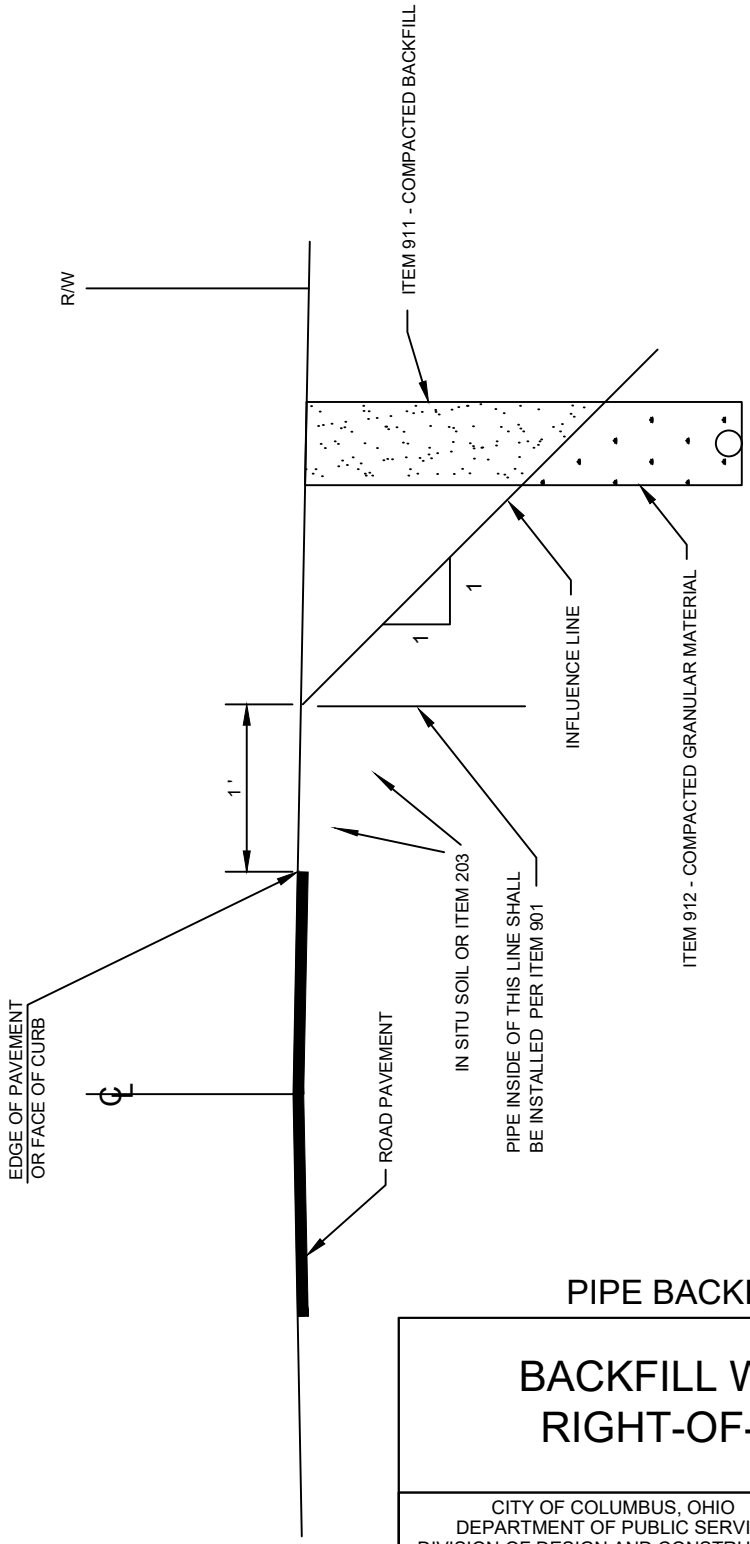

PIPE BACKFILL

BACKFILL WITHIN RIGHT-OF-WAY

CITY OF COLUMBUS, OHIO
DEPARTMENT OF PUBLIC SERVICE
DIVISION OF DESIGN AND CONSTRUCTION

CITY ENGINEER

STD DWG
2179

07/01/20

SHT 1 OF 3

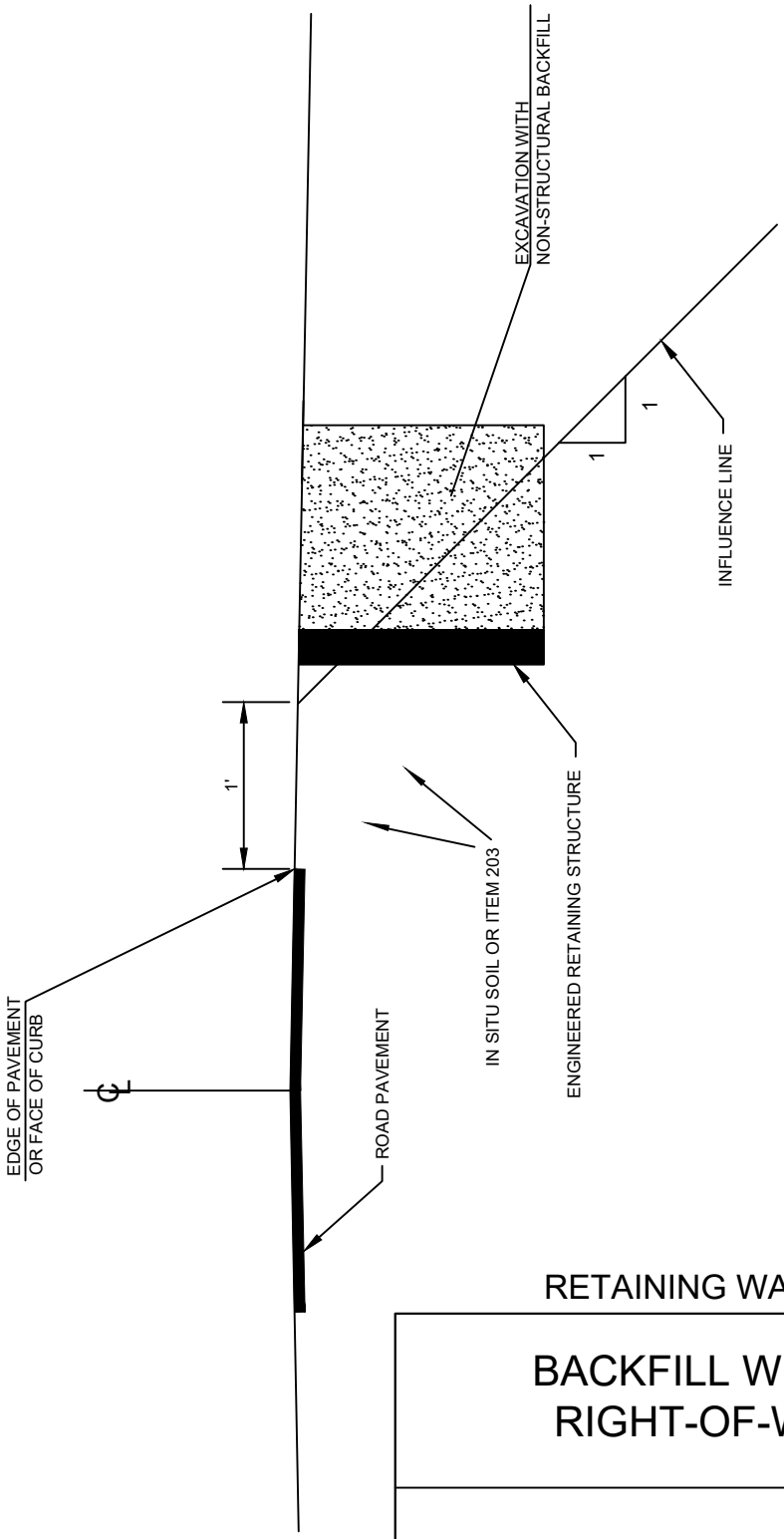

RETAINING WALL

BACKFILL WITHIN RIGHT-OF-WAY

CITY OF COLUMBUS, OHIO
DEPARTMENT OF PUBLIC SERVICE
DIVISION OF DESIGN AND CONSTRUCTION

STD DWG
2179
07/01/20
SHT 2 OF 3

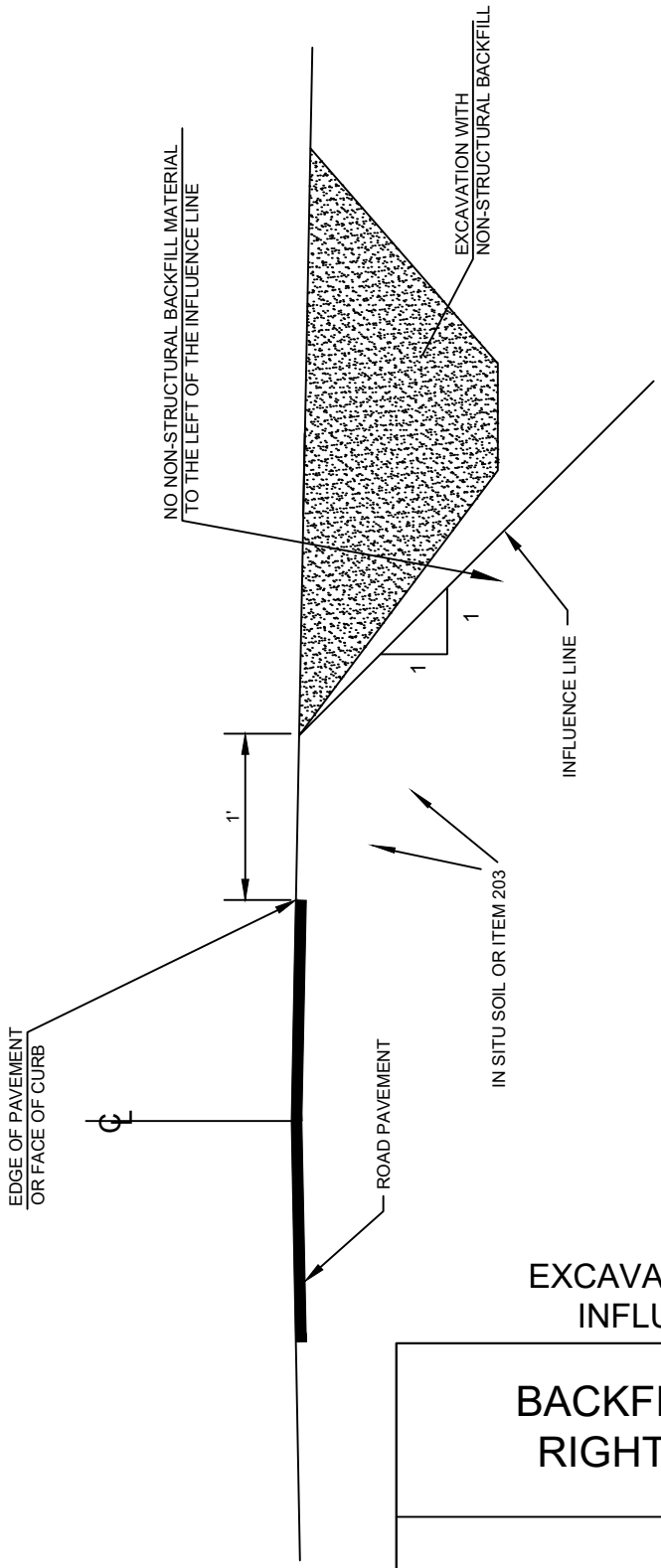

EXCAVATION OUTSIDE
INFLUENCE LINE

BACKFILL WITHIN RIGHT-OF-WAY

CITY OF COLUMBUS, OHIO
DEPARTMENT OF PUBLIC SERVICE
DIVISION OF DESIGN AND CONSTRUCTION

STD DWG
2179
07/01/20
SHT 3 OF 3

ARTERIAL AT ARTERIAL

ALL SIGNS AT SIGNALED INTERSECTIONS SHALL BE 18" AND SEPARATED ON INDIVIDUAL POLES.

ARTERIAL

ARTERIAL

ARTERIAL

ARTERIAL

ALL SIGNS SHALL BE 18" HIGH x REQUIRED LENGTH, MOUNTED 14' ABOVE GROUND LEVEL. SIGNS SHALL BE LOCATED NEAR LEFT AND FAR RIGHT AT ALL LOCATIONS.

ARTERIAL AT NON-ARTERIAL

LOCAL

LOCAL

ARTERIAL

ARTERIAL

ALL SIGNS SHALL BE 12" HIGH x REQUIRED LENGTH, MOUNTED 14' ABOVE GROUND LEVEL. SIGNS SHALL BE LOCATED FAR RIGHT FOR THE ARTERIAL WITH TWO SIGNS PER POST. IF THE COMBINED SQUARE FOOTAGE OF THE TWO SIGNS EXCEEDS 10 SQUARE FEET USE SEPARATE POST FOR EACH SIGN AS ABOVE.

LOCAL AT LOCAL

STOP

STOP

LOCAL

LOCAL

STOP

LOCAL

LOCAL

ALL SIGNS SHALL BE 9" HIGH x REQUIRED LENGTH, MOUNTED 11' ABOVE GROUND LEVEL. LOCAL COLLECTOR SHALL BE SIGNED WITH TWO SIGNS PER POST, LOCATED IN SUCH A MANNER AS TO MINIMIZE OBSTRUCTION OF OTHER TRAFFIC CONTROL SIGNS.

PLACEMENT

LOCAL COLLECTOR AND RESIDENTIAL STREETS SHALL HAVE THE SAME SIZE POST AND PLACEMENT STANDARDS.

STREET NAME SIGN

CITY OF COLUMBUS, OHIO
DEPARTMENT OF PUBLIC SERVICE
DIVISION OF DESIGN AND CONSTRUCTION

STD DWG
2185

3/30/2018

CITY ENGINEER

SHT 1 OF 9

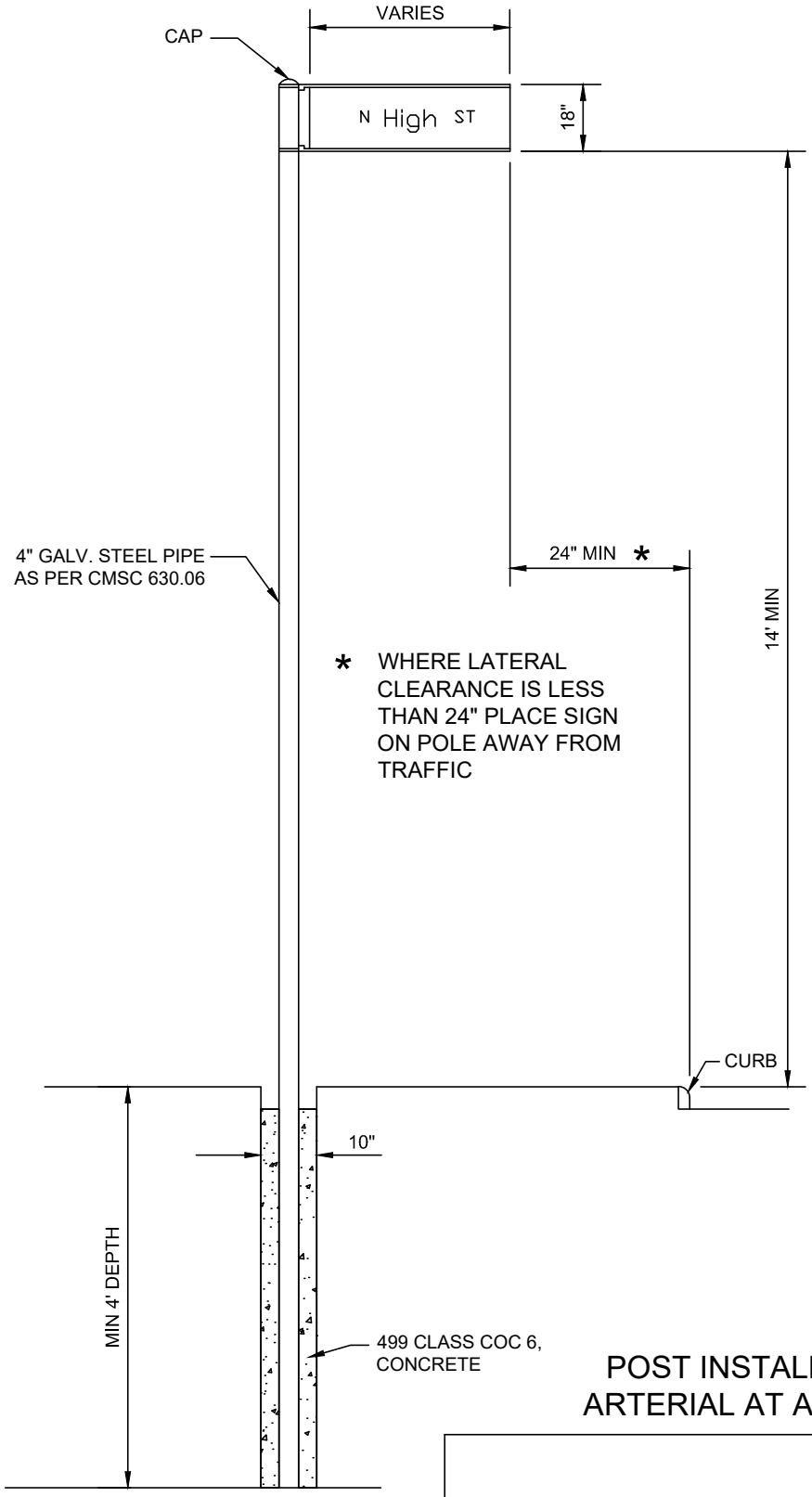

POST INSTALLATION
ARTERIAL AT ARTERIAL

DIMENSIONS SHOWN SHALL BE CONSIDERED MINIMUM DIMENSIONS FOR NEW INSTALLATIONS AS WELL AS FOR INSTALLATIONS USING EXISTING SUPPORTS SUCH AS UTILITY POLES AND TRAFFIC SIGNAL POLES.

ONLY ONE STREET NAME SIGN PER SUPPORT SHALL BE LOCATED NEAR-LEFT AND FAR-RIGHT AT ALL LOCATIONS UNLESS OTHERWISE SPECIFIED.

STREET NAME SIGN

CITY OF COLUMBUS, OHIO
DEPARTMENT OF PUBLIC SERVICE
DIVISION OF DESIGN AND CONSTRUCTION

STD DWG
2185

3/30/2018

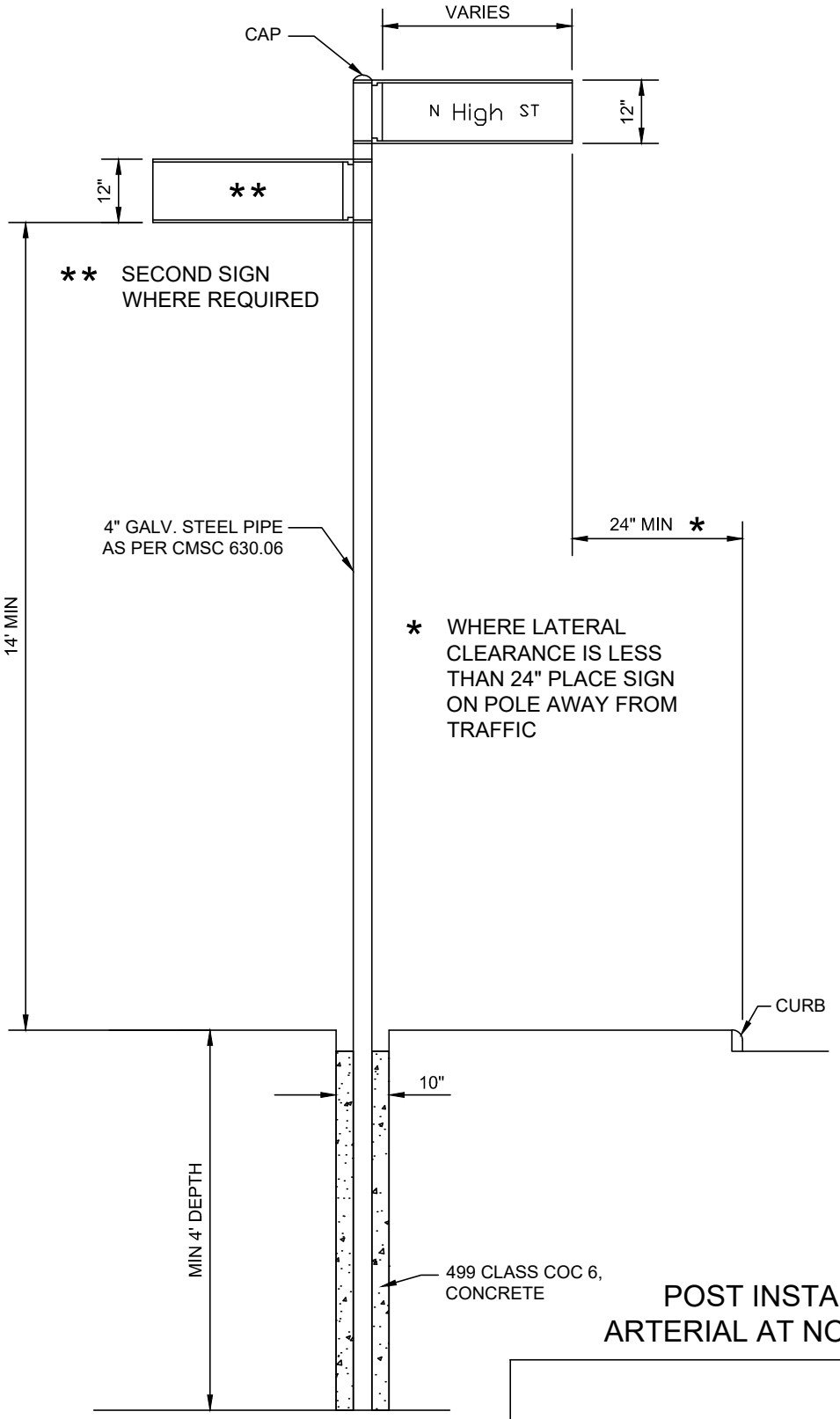

POST INSTALLATION
ARTERIAL AT NON-ARTERIAL

SIGNS SHALL BE LOCATED FAR-RIGHT FOR THE ARTERIAL WITH 2 SIGNS PER SUPPORT. IF THE COMBINED SQUARE FOOTAGE EXCEEDS 10 SQUARE FEET, A SEPARATE SUPPORT SHALL BE USED FOR EACH SIGN.

STREET NAME SIGN

CITY OF COLUMBUS, OHIO
DEPARTMENT OF PUBLIC SERVICE
DIVISION OF DESIGN AND CONSTRUCTION

STD DWG
2185
3/30/2018
SHT 3 OF 9

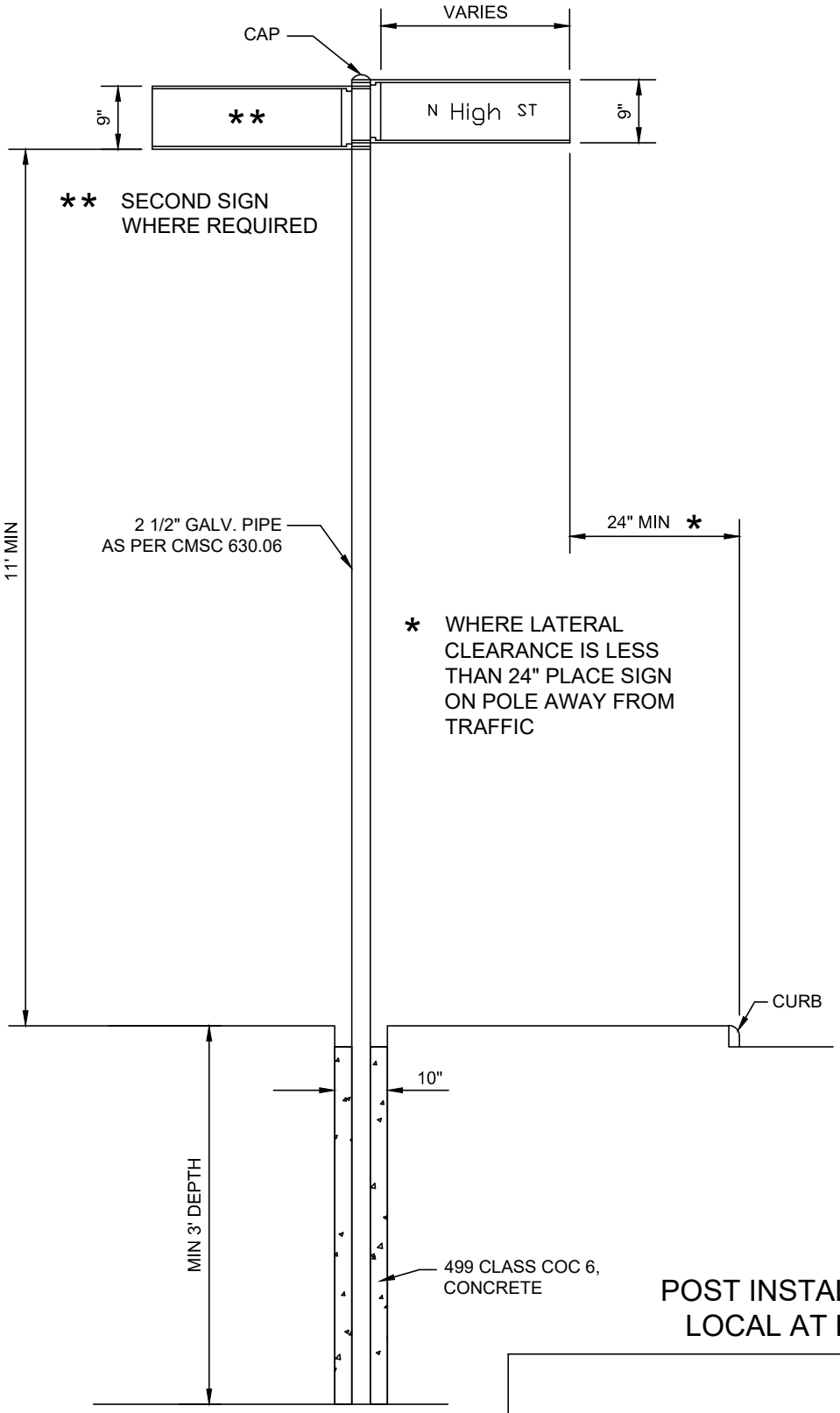

POST INSTALLATION
LOCAL AT LOCAL

STREET NAME SIGN

LOCAL COLLECTOR AND RESIDENTIAL STREETS
SHALL BE TREATED THE SAME.

CITY OF COLUMBUS, OHIO
DEPARTMENT OF PUBLIC SERVICE
DIVISION OF DESIGN AND CONSTRUCTION

STD DWG
2185
3/30/2018
SHT 4 OF 9

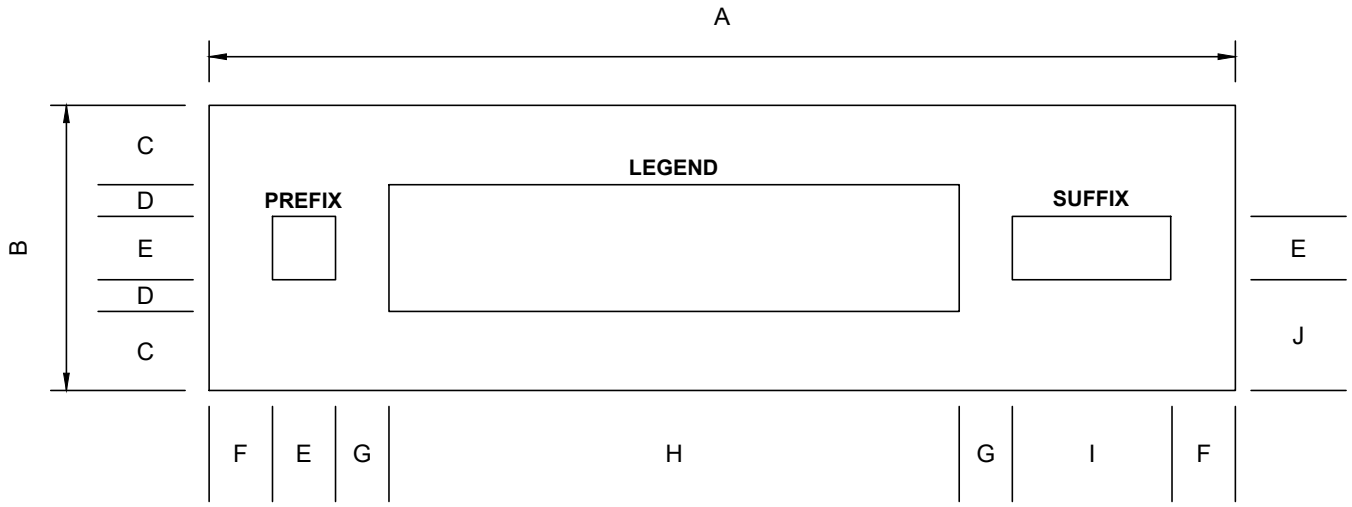

SIZE	A	B	C	D	E	F	G	H	I	J
9" SIGN	VARIES	9.0"	2.5"	1.0"	2.0"	2.0" MIN	2.0" MIN	VARIES	VARIES	3.5"
12" SIGN	VARIES	12.0"	3.0"	1.5"	3.0"	3.0" MIN	3.0" MIN	VARIES	VARIES	4.5"
18" SIGN	72.0" MAX	18.0"	5.0"	2.0"	4.0"	4.0" MIN	4.0" MIN	VARIES	VARIES	7.0"

BLADE

STREET NAME SIGN

CITY OF COLUMBUS, OHIO
DEPARTMENT OF PUBLIC SERVICE
DIVISION OF DESIGN AND CONSTRUCTION

STD DWG
2185

3/30/2018

SHT 5 OF 9

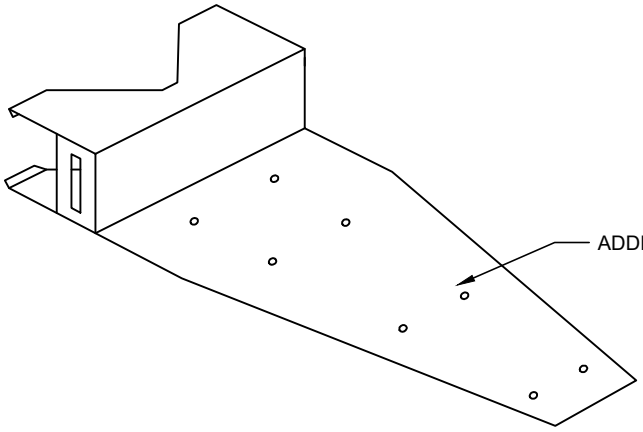

* USED WHEN SIGN AREA EXCEEDS SIX (6) SQUARE FEET. PLACE TWO (2) BRACKETS BACK TO BACK ON TOP AND BOTTOM OF SIGN BLADE.

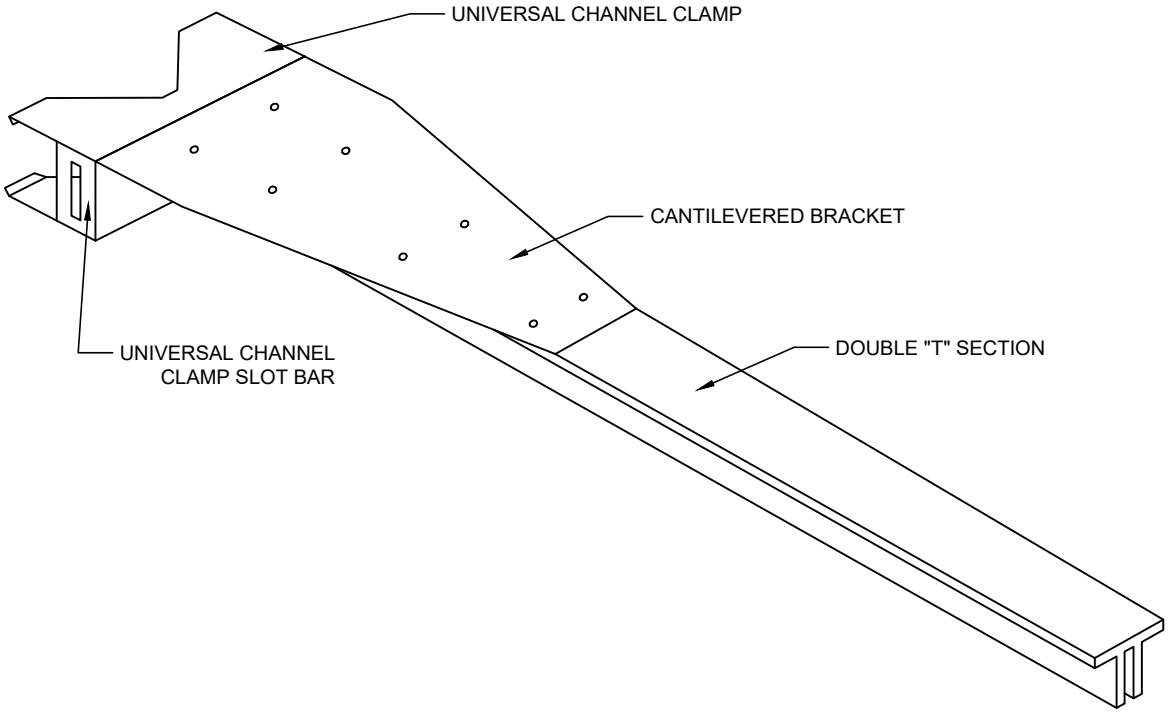

MOUNTING HARDWARE

FASTEN TO SUPPORT WITH PRE-ASSEMBLED BUCKLE-STRAP COMBINATION ASSEMBLY.

THE CANTILEVER BRACKET SHALL BE BANDED TO THE SUPPORT USING TYPE 201 STAINLESS STEEL WITH A MINIMUM THICKNESS OF 0.036" AND 3/4" WIDTH.

STREET NAME SIGN

CITY OF COLUMBUS, OHIO
DEPARTMENT OF PUBLIC SERVICE
DIVISION OF DESIGN AND CONSTRUCTION

STD DWG
2185

3/30/2018

SHT 6 OF 9

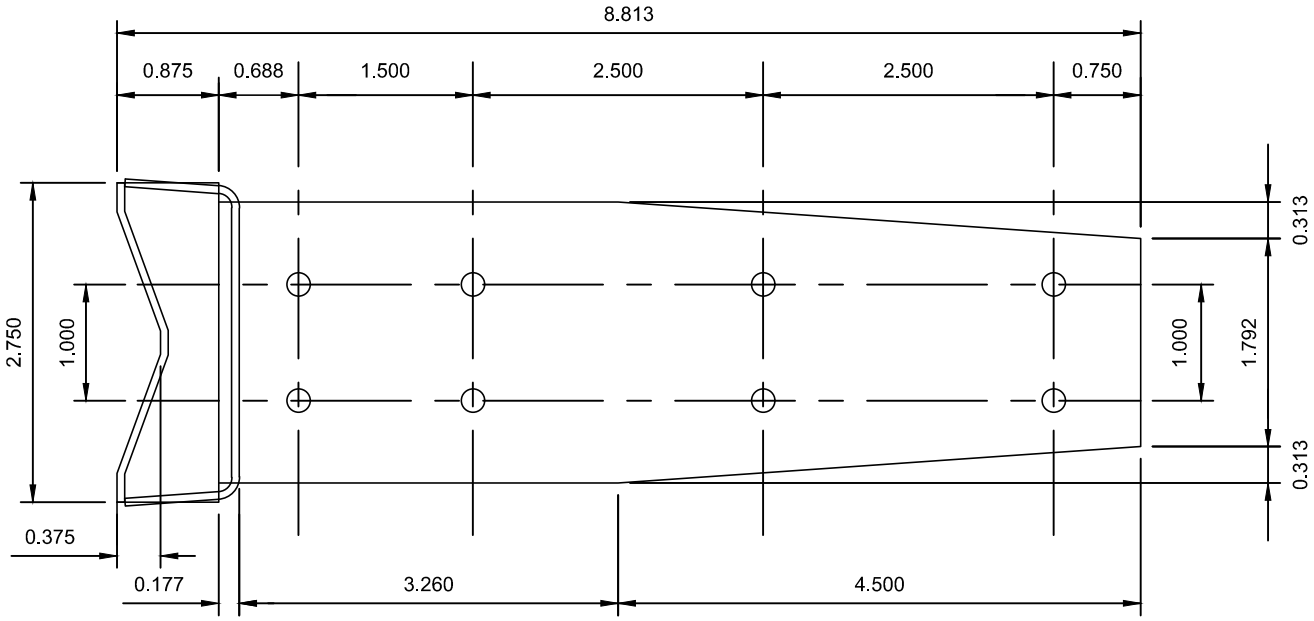

TOP VIEW

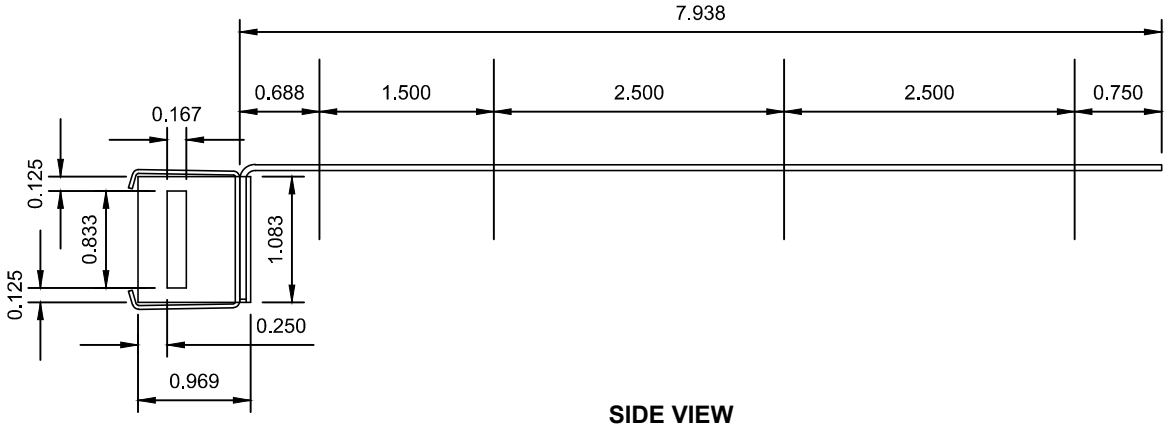

SIDE VIEW

MOUNTING HARDWARE
CANTILEVER BRACKET

STREET NAME SIGN

CITY OF COLUMBUS, OHIO
DEPARTMENT OF PUBLIC SERVICE
DIVISION OF DESIGN AND CONSTRUCTION

STD DWG
2185

3/30/2018

SHT 7 OF 9

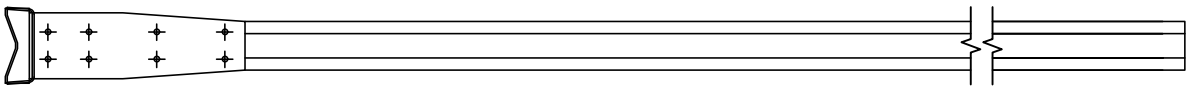

PLAN

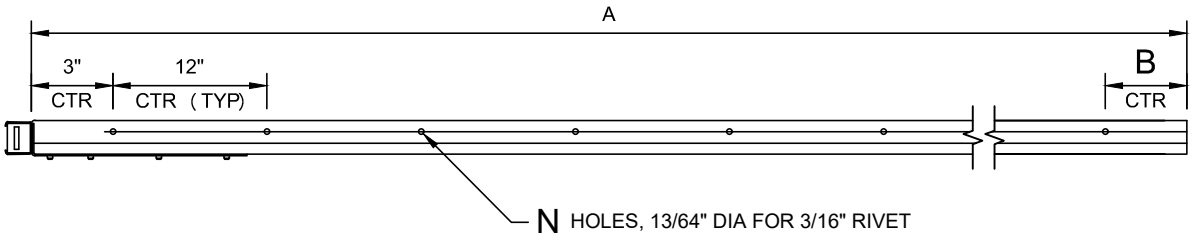

ELEVATION

A (inches)	B (inches)	N (number of holes)
42	3	4
48	1	4
54	3	5

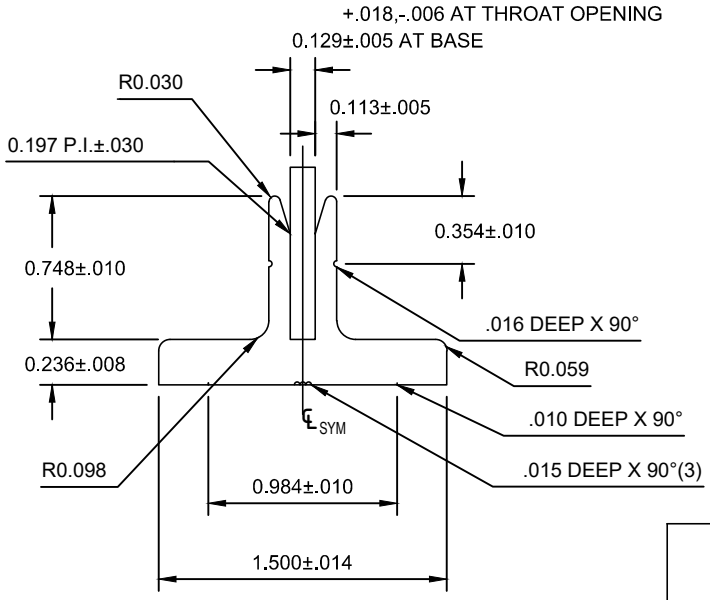

SECTION

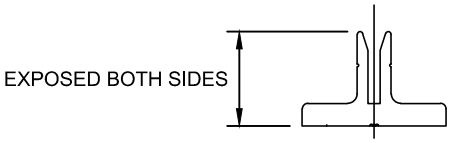

ACTUAL SIZE

MOUNTING HARDWARE
DOUBLE TEE, TYPE II

USE TYPE II TEE FOR 9" AND 12" BLADES THAT ARE 42", 48" AND 54" LONG.

USE TYPE I TEE FOR 9" AND 12" BLADES THAT ARE LESS THAN 42" LONG.

STREET NAME SIGN

CITY OF COLUMBUS, OHIO
DEPARTMENT OF PUBLIC SERVICE
DIVISION OF DESIGN AND CONSTRUCTION

STD DWG
2185

3/30/2018

SHT 8 OF 9

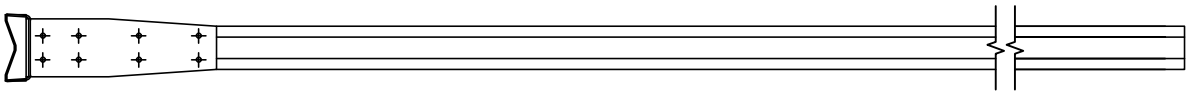

PLAN

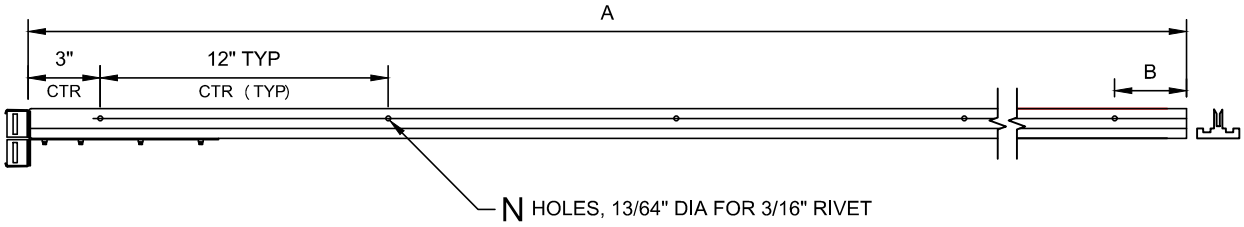

ELEVATION

A (inches)	B (inches)	N (number of holes)
42	3	4
48	1	4
54	3	5
60	1	6
72	1	7

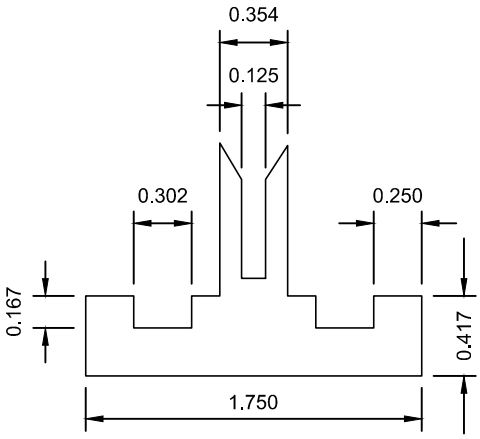

SECTION

USE TYPE III TEES FOR 9" AND 12" BLADES THAT ARE 60", 66" & 72" LONG AND ALL 18" BLADES WITH BACK TO BACK CANTILEVER BRACKETS.

MOUNTING HARDWARE
DOUBLE TEE, TYPE III

STREET NAME SIGN

CITY OF COLUMBUS, OHIO
DEPARTMENT OF PUBLIC SERVICE
DIVISION OF DESIGN AND CONSTRUCTION

STD DWG
2185

3/30/2018

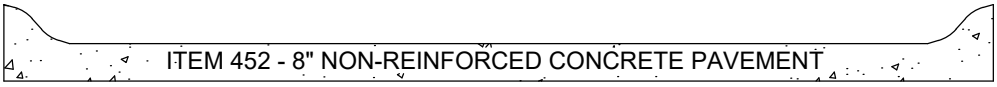

SECTION VIEW OF DRIVE

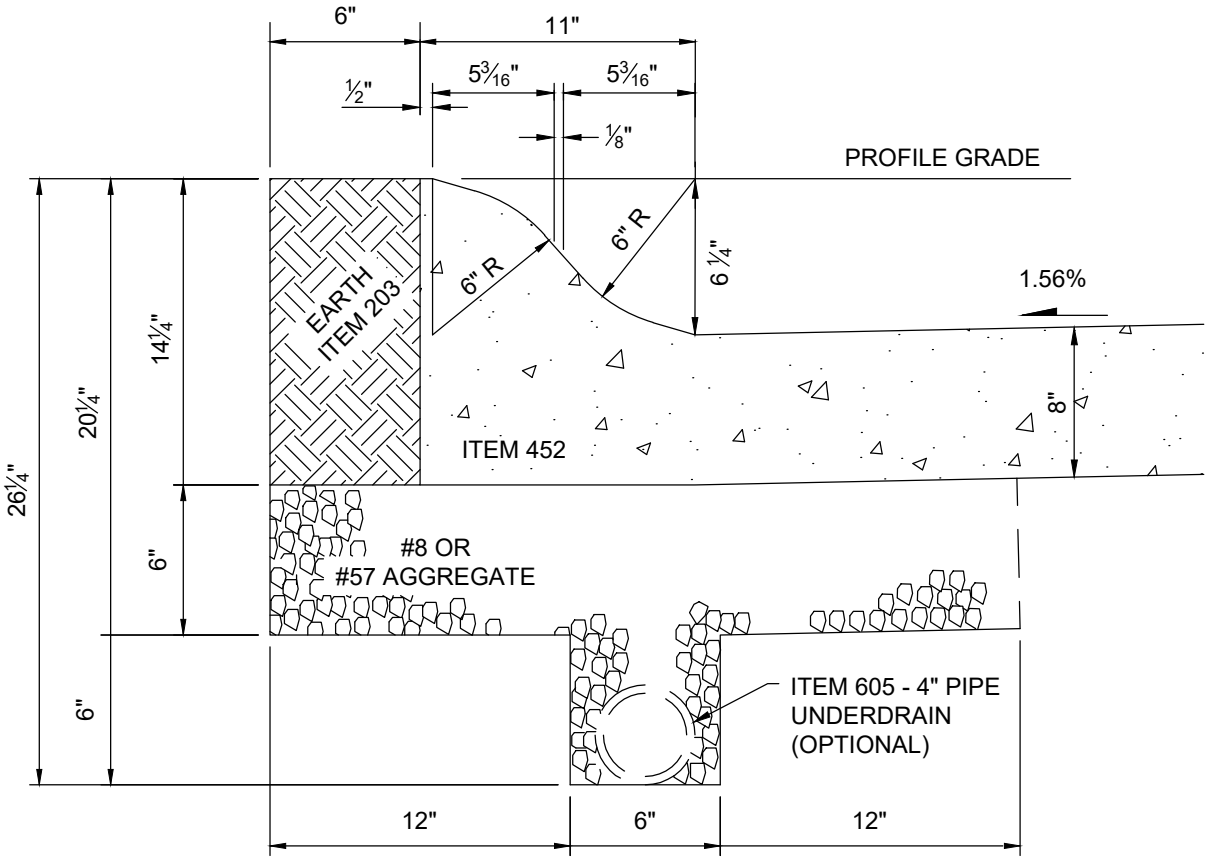

ITEM 452 - 8" NON-REINFORCED CONCRETE PAVEMENT WITH INTEGRAL CURB

INTEGRAL CURB, GUTTER, AND PAVEMENT FOR COMMERCIAL DRIVES	
CITY OF COLUMBUS, OHIO DEPARTMENT OF PUBLIC SERVICE DIVISION OF DESIGN AND CONSTRUCTION	STD DWG 2225
CITY ENGINEER	4/30/18
	SHT 1 OF 1

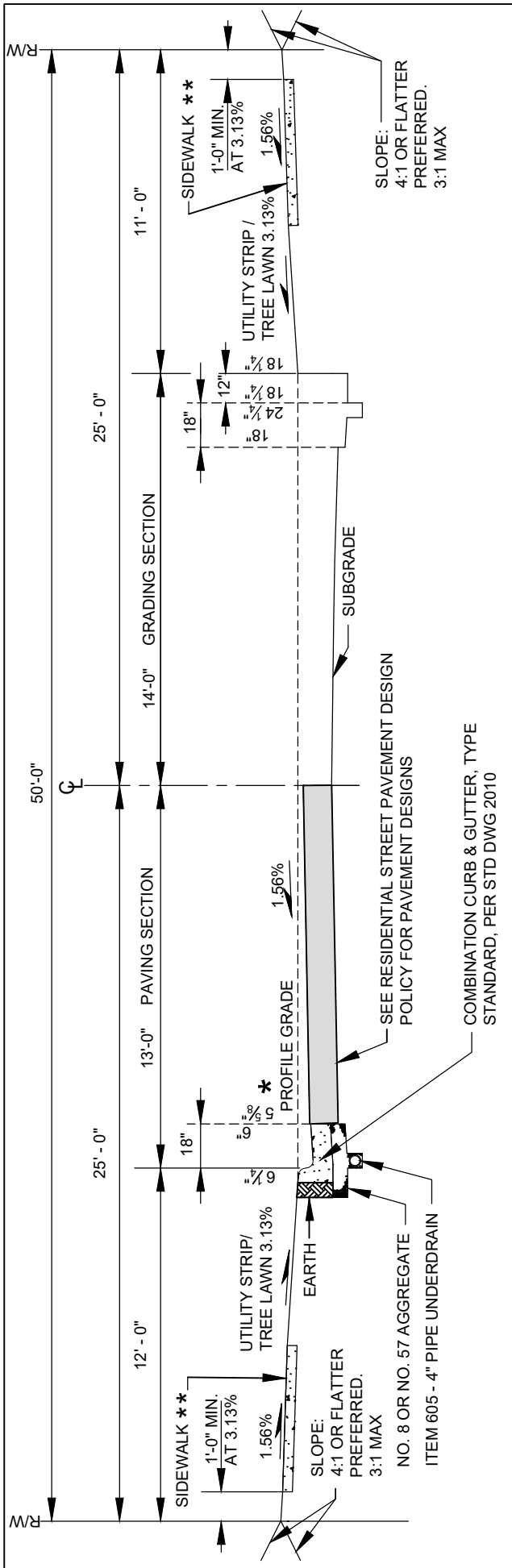

* FOR COMBINATION CURB AND GUTTER, TYPE STANDARD, THE PROFILE GRADE AND STRING LINE ELEVATIONS ARE THE SAME.

** SIDEWALK WIDTH PER STANDARD DRAWING 2300.

A MINIMUM 7FT WIDE PEDESTRIAN ACCESS ROUTE (PAR) SHALL BE PROVIDED BETWEEN OPPOSING RAMPS AND SHALL HAVE A CROSS-SLOPE (THE LONGITUDINAL STREET SLOPE) NO GREATER THAN 1.56%.

26' SECTION (RESIDENTIAL) COMBINATION CURB & GUTTER, TYPE STANDARD

CITY OF COLUMBUS, OHIO
DEPARTMENT OF PUBLIC SERVICE
DIVISION OF DESIGN AND CONSTRUCTION

CITY ENGINEER

STD DWG
2100

3/30/2018

SHT 1 OF 1

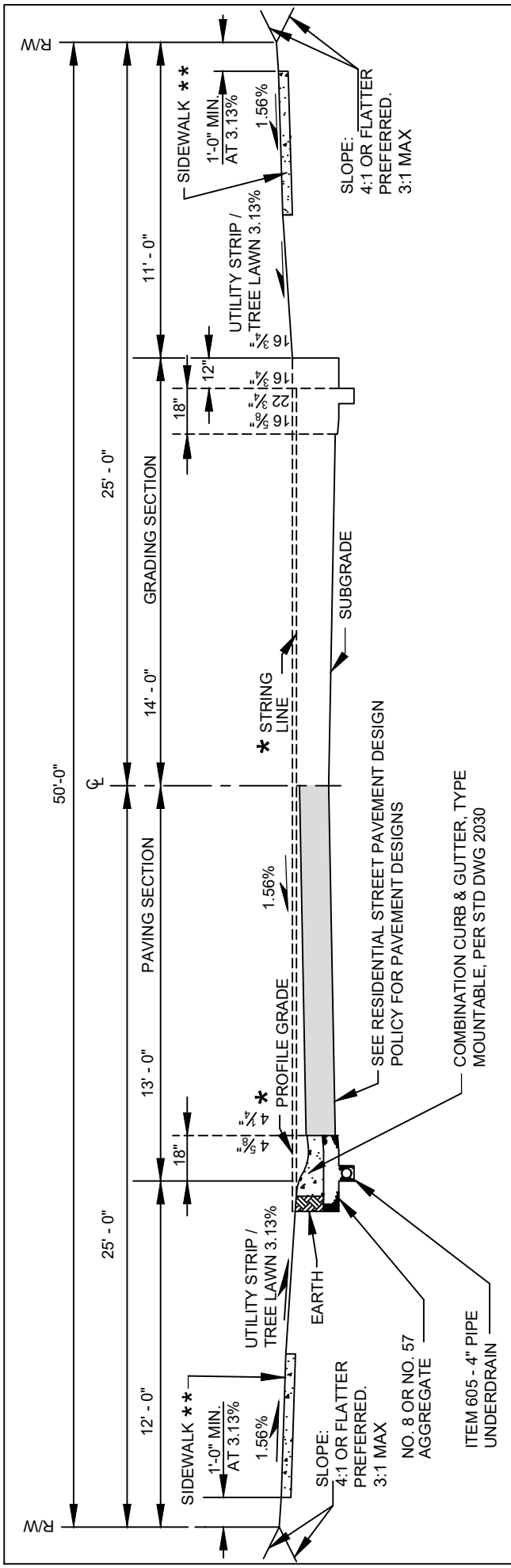

* FOR COMBINATION CURB AND GUTTER, TYPE MOUNTABLE, THE PROFILE GRADE ELEVATION IS 1 ½" ABOVE THE STRING LINE. ALL MEASUREMENTS ARE TAKEN FROM THE STRING LINE.

** SIDEWALK WIDTH PER STANDARD DRAWING 2300.

A MINIMUM 7FT WIDE PEDESTRIAN ACCESS ROUTE (PAR) SHALL BE PROVIDED BETWEEN OPPOSING RAMPS AND SHALL HAVE A CROSS-SLOPE (THE LONGITUDINAL STREET SLOPE) NO GREATER THAN 1.56%.

26' SECTION (RESIDENTIAL) COMBINATION CURB & GUTTER, TYPE MOUNTABLE

CITY OF COLUMBUS, OHIO
DEPARTMENT OF PUBLIC SERVICE
DIVISION OF DESIGN AND CONSTRUCTION

CITY ENGINEER

STD DWG
2101

3/30/2018

SHT 1 OF 1

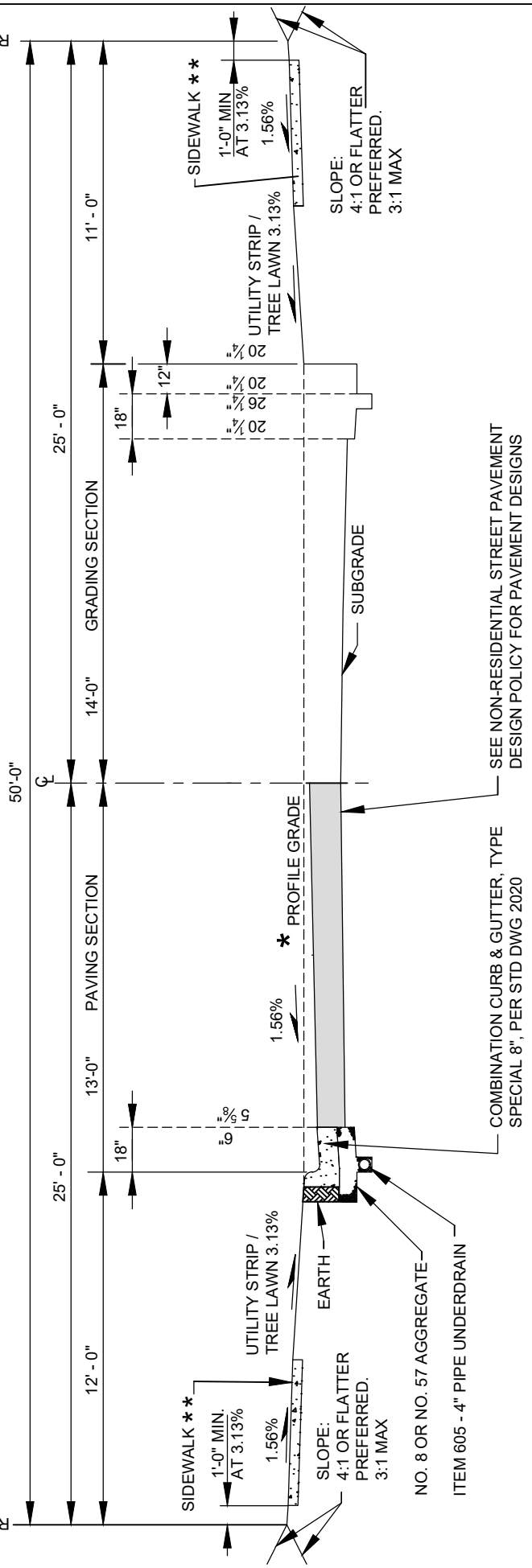

* FOR COMBINATION CURB AND GUTTER, TYPE SPECIAL 8", THE PROFILE GRADE AND STRING LINE ELEVATIONS ARE THE SAME.

** SIDEWALK WIDTH PER STANDARD DRAWING 2300.

A MINIMUM 7FT WIDE PEDESTRIAN ACCESS ROUTE (PAR) SHALL BE PROVIDED BETWEEN OPPOSING RAMPS AND SHALL HAVE A CROSS-SLOPE (THE LONGITUDINAL STREET SLOPE) NO GREATER THAN 1.56%.

26' SECTION (NON-RESIDENTIAL) COMBINATION CURB & GUTTER, TYPE SPECIAL 8"

CITY OF COLUMBUS, OHIO
DEPARTMENT OF PUBLIC SERVICE
DIVISION OF DESIGN AND CONSTRUCTION

CITY ENGINEER

STD DWG
2105

3/30/2018

SHT 1 OF 1

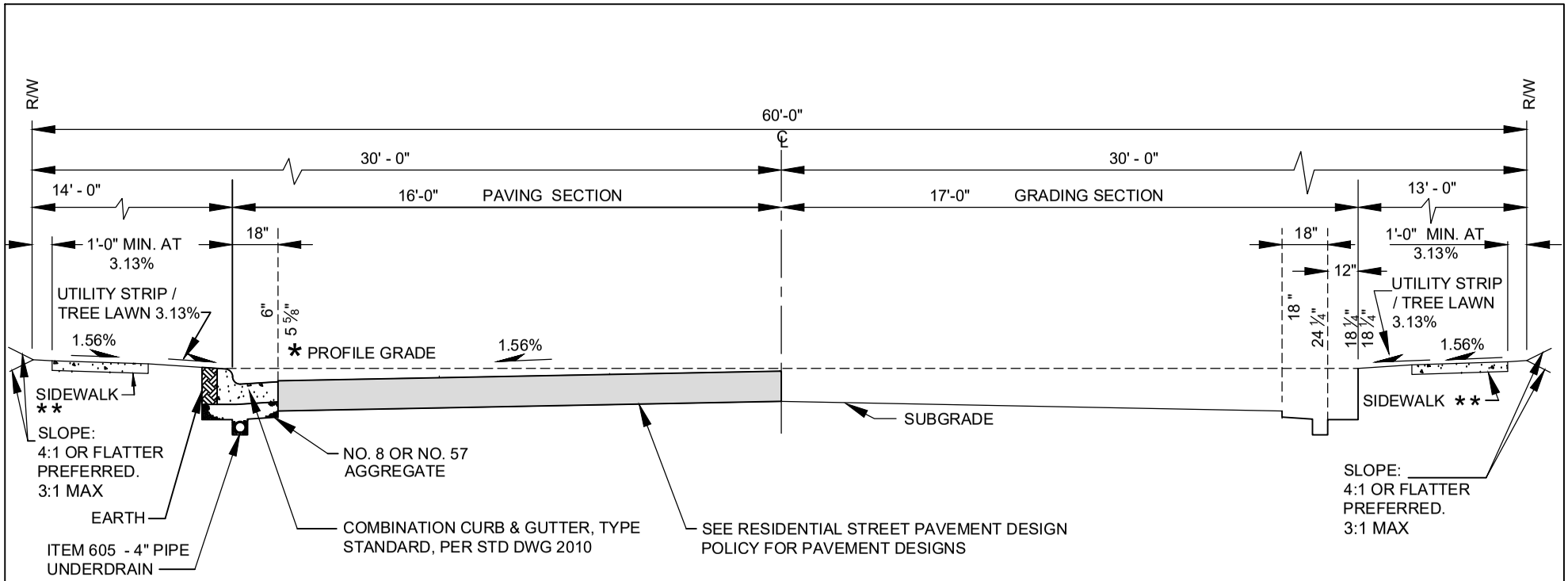

* FOR COMBINATION CURB AND GUTTER, TYPE STANDARD, THE PROFILE GRADE AND STRING LINE ELEVATIONS ARE THE SAME.

** SIDEWALK WIDTH PER STANDARD DRAWING 2300.

A MINIMUM 7FT WIDE PEDESTRIAN ACCESS ROUTE (PAR) SHALL BE PROVIDED BETWEEN OPPOSING RAMPS AND SHALL HAVE A CROSS-SLOPE (THE LONGITUDINAL STREET SLOPE) NO GREATER THAN 1.56%.

32' SECTION (RESIDENTIAL) COMBINATION CURB & GUTTER, TYPE STANDARD

CITY OF COLUMBUS, OHIO
DEPARTMENT OF PUBLIC SERVICE
DIVISION OF DESIGN AND CONSTRUCTION

CITY ENGINEER

STD DWG
2110

3/30/2018

SHT 1 OF 1

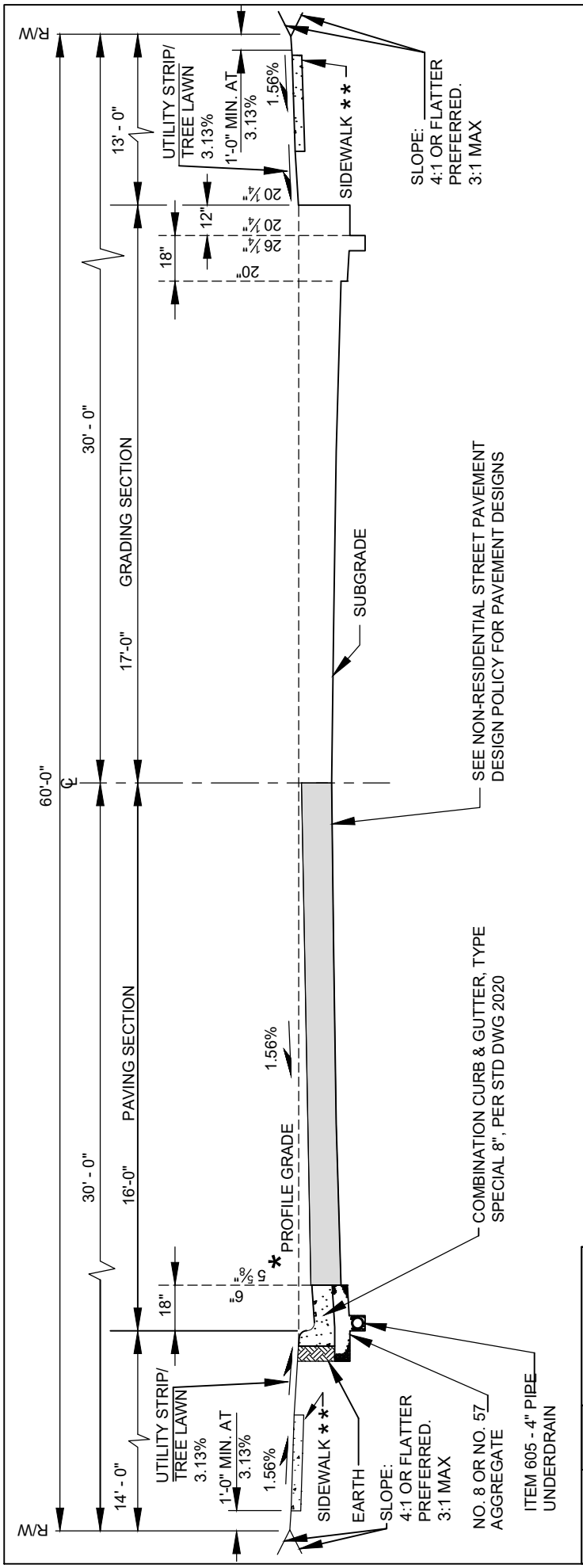

* FOR COMBINATION CURB AND GUTTER, TYPE SPECIAL 8", THE PROFILE GRADE AND STRING LINE ELEVATIONS ARE THE SAME.

* * SIDEWALK WIDTH PER STANDARD DRAWING 2300.

A MINIMUM 7FT WIDE PEDESTRIAN ACCESS ROUTE (PAR) SHALL BE PROVIDED BETWEEN OPPOSING RAMPS AND SHALL HAVE A CROSS-SLOPE (THE LONGITUDINAL STREET SLOPE) NO GREATER THAN 1.56%.

32' SECTION (NON-RESIDENTIAL) COMBINATION CURB & GUTTER, TYPE SPECIAL 8"

CITY OF COLUMBUS, OHIO
DEPARTMENT OF PUBLIC SERVICE
DIVISION OF DESIGN AND CONSTRUCTION

CITY ENGINEER

STD DWG
2111

3/30/2018

SHT 1 OF 1

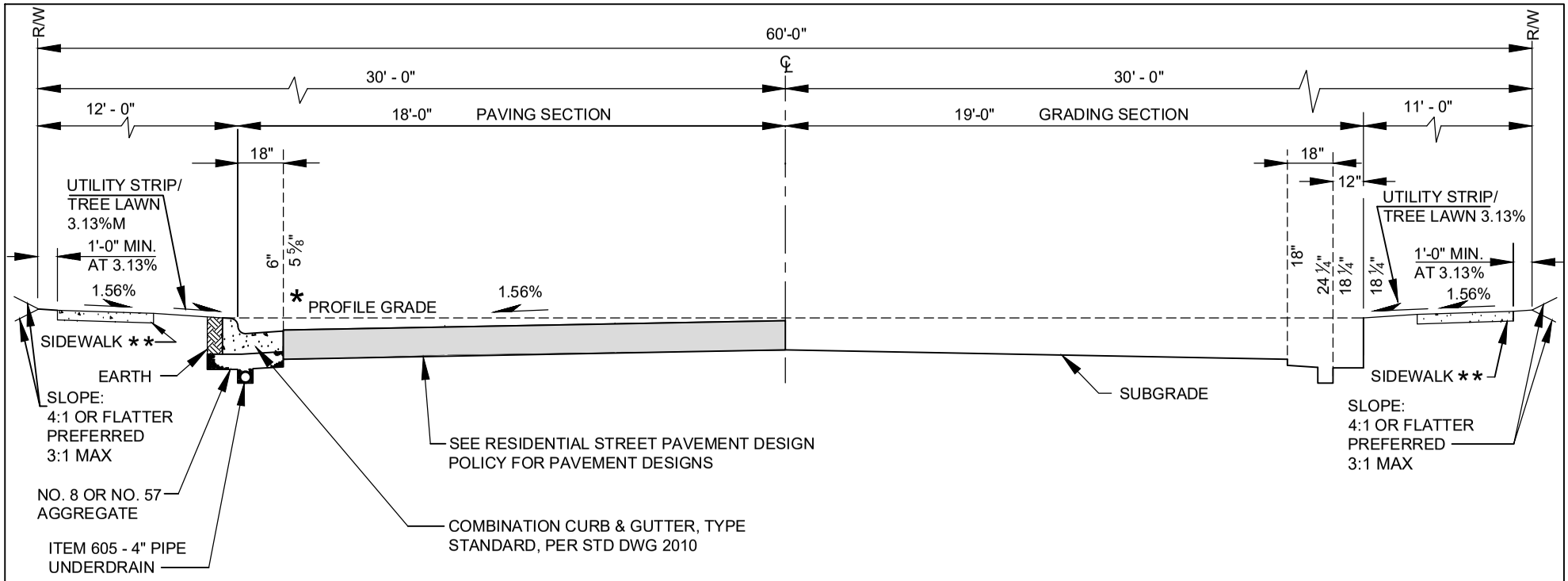

* FOR COMBINATION CURB AND GUTTER, TYPE STANDARD, THE PROFILE GRADE AND STRING LINE ELEVATIONS ARE THE SAME.

** SIDEWALK WIDTH PER STANDARD DRAWING 2300.

A MINIMUM 7FT WIDE PEDESTRIAN ACCESS ROUTE (PAR) SHALL BE PROVIDED BETWEEN OPPOSING RAMPS AND SHALL HAVE A CROSS-SLOPE (THE LONGITUDINAL STREET SLOPE) NO GREATER THAN 1.56%.

36' SECTION (RESIDENTIAL) COMBINATION CURB & GUTTER, TYPE STANDARD

CITY OF COLUMBUS, OHIO
DEPARTMENT OF PUBLIC SERVICE
DIVISION OF DESIGN AND CONSTRUCTION

CITY ENGINEER

STD DWG
2115

3/30/2018

SHT 1 OF 1

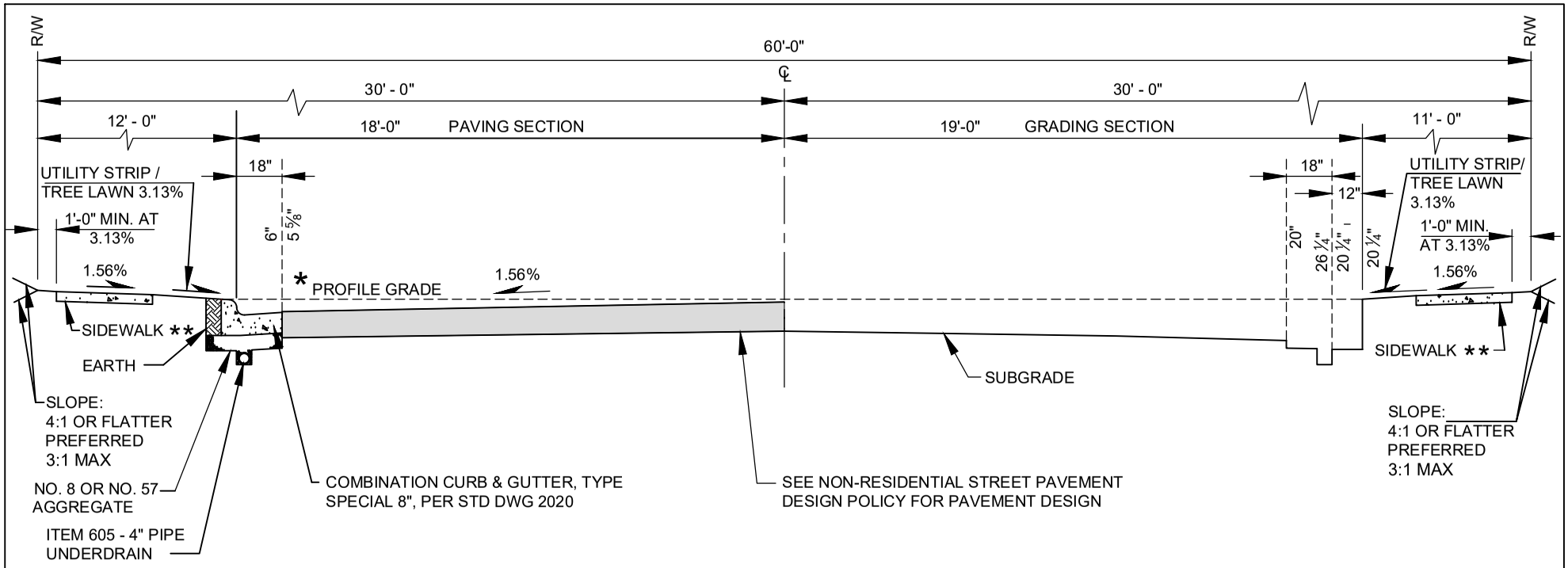

* FOR COMBINATION CURB AND GUTTER, TYPE SPECIAL 8", THE PROFILE GRADE AND STRING LINE ELEVATIONS ARE THE SAME.

** SIDEWALK WIDTH PER STANDARD DRAWING 2300.

A MINIMUM 7FT WIDE PEDESTRIAN ACCESS ROUTE (PAR) SHALL BE PROVIDED BETWEEN OPPOSING RAMPS AND SHALL HAVE A CROSS-SLOPE (THE LONGITUDINAL STREET SLOPE) NO GREATER THAN 1.56%.

36' SECTION (NON-RESIDENTIAL) COMBINATION CURB & GUTTER, TYPE SPECIAL 8"

CITY OF COLUMBUS, OHIO
DEPARTMENT OF PUBLIC SERVICE
DIVISION OF DESIGN AND CONSTRUCTION

CITY ENGINEER

STD DWG
2116

3/30/2018

SHT 1 OF 1

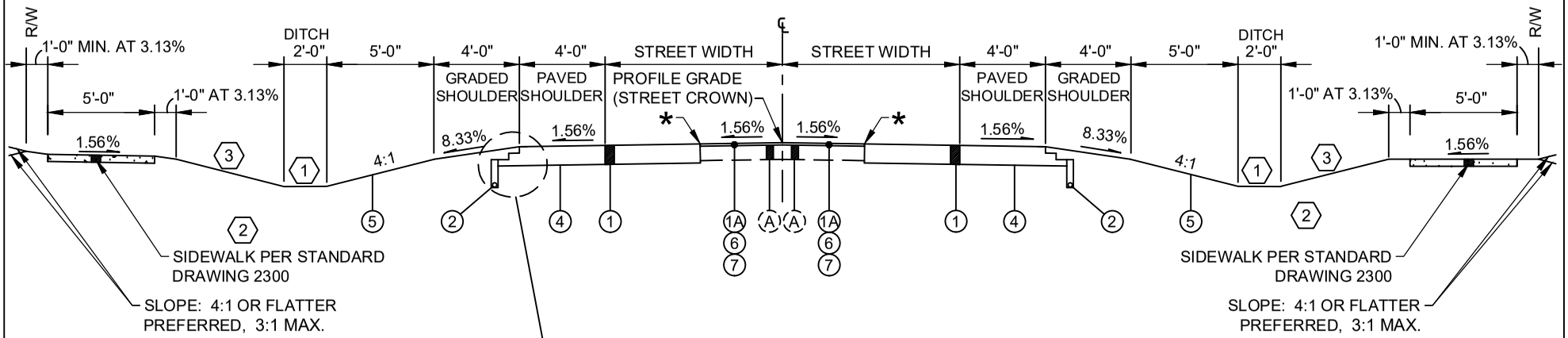

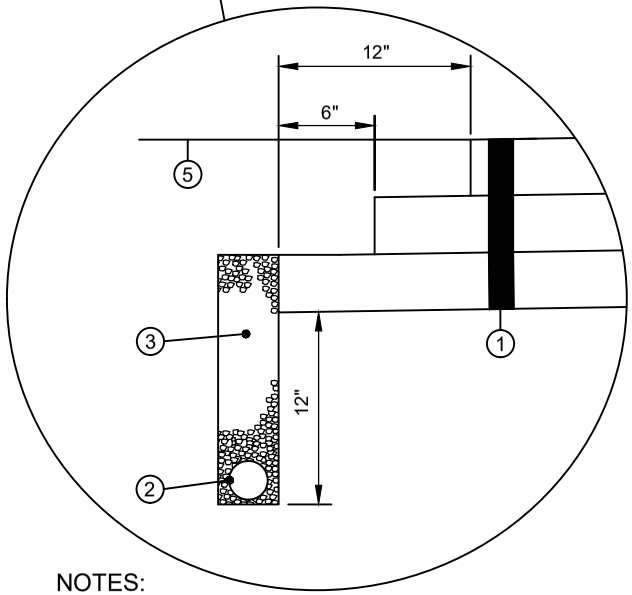

* PLACE LONGITUDINAL WIDENING JOINT AT A LOCATION WITH SOUND PAVEMENT, MEASURING NO LESS THAN 2.5'-3' FROM THE LANE CENTERLINE WHEN LANES ARE 10'-12' RESPECTIVELY. THE STRAIGHT SECTION OF THE CUT SHALL NOT BE PLACED IN THE TRAVELED LANE ON BOTH SIDES.

NOTES:

(1) DITCH DESIGN PER CITY STORMWATER DRAINAGE MANUAL.

(2) PUBLIC ACCESS EASEMENT REQUIRED FOR ANY WALK OUTSIDE OF R/W.

(3) SLOPE: 4:1 PREFERRED
3:1 MAX

(A) EXISTING PAVEMENT

(1) PAVEMENT DESIGN FOR WIDENING SHALL BE PER CITY OF COLUMBUS NON-RESIDENTIAL STREET PAVEMENT DESIGN POLICY. PAVEMENT SHALL BE EQUAL TO OR GREATER THAN EXISTING PAVEMENT TO PROVIDE POSITIVE DRAINAGE OF SUBGRADE.

(1A) ITEM 441 - ASPHALT CONCRETE, SURFACE COURSE

(2) ITEM 605 - 4" PIPE UNDERDRAIN

(3) NO. 8 OR NO. 57 AGGREGATE

(4) ITEM 204 - SUBGRADE COMPACTION

(5) ITEM 659 - SEEDING AND MULCHING

(6) ITEM 254 - 1½" PAVEMENT PLANING

(7) ITEM 407 - TACK COAT

WIDENING UNCURBED SECTION SIDE DITCH

CITY OF COLUMBUS, OHIO
DEPARTMENT OF PUBLIC SERVICE
DIVISION OF DESIGN AND CONSTRUCTION

CITY ENGINEER

STD DWG
2130

4/30/2018

SHT 1 OF 1

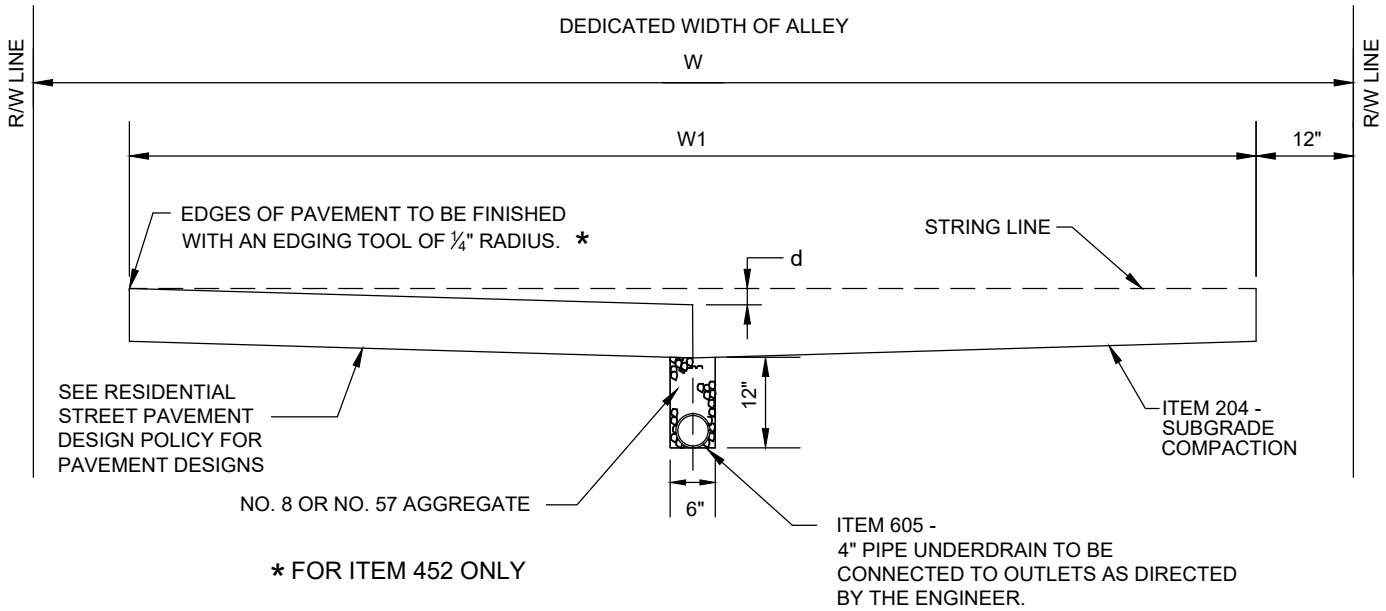

* FOR ITEM 452 ONLY

W (R/W WIDTH)	W1	d
15'	13'	2 ¾"
16'	14'	3"
18'	16'	3 ¼"
20'	18'	3 ½"
OVER 20'	20'	3 ¾"
OVER 24'	24'	4 ½"

TYPICAL SECTION

ALLEY

CITY OF COLUMBUS, OHIO
DEPARTMENT OF PUBLIC SERVICE
DIVISION OF DESIGN AND CONSTRUCTION

STD DWG
2151

4/30/2018

CITY ENGINEER

SHT 1 OF 1

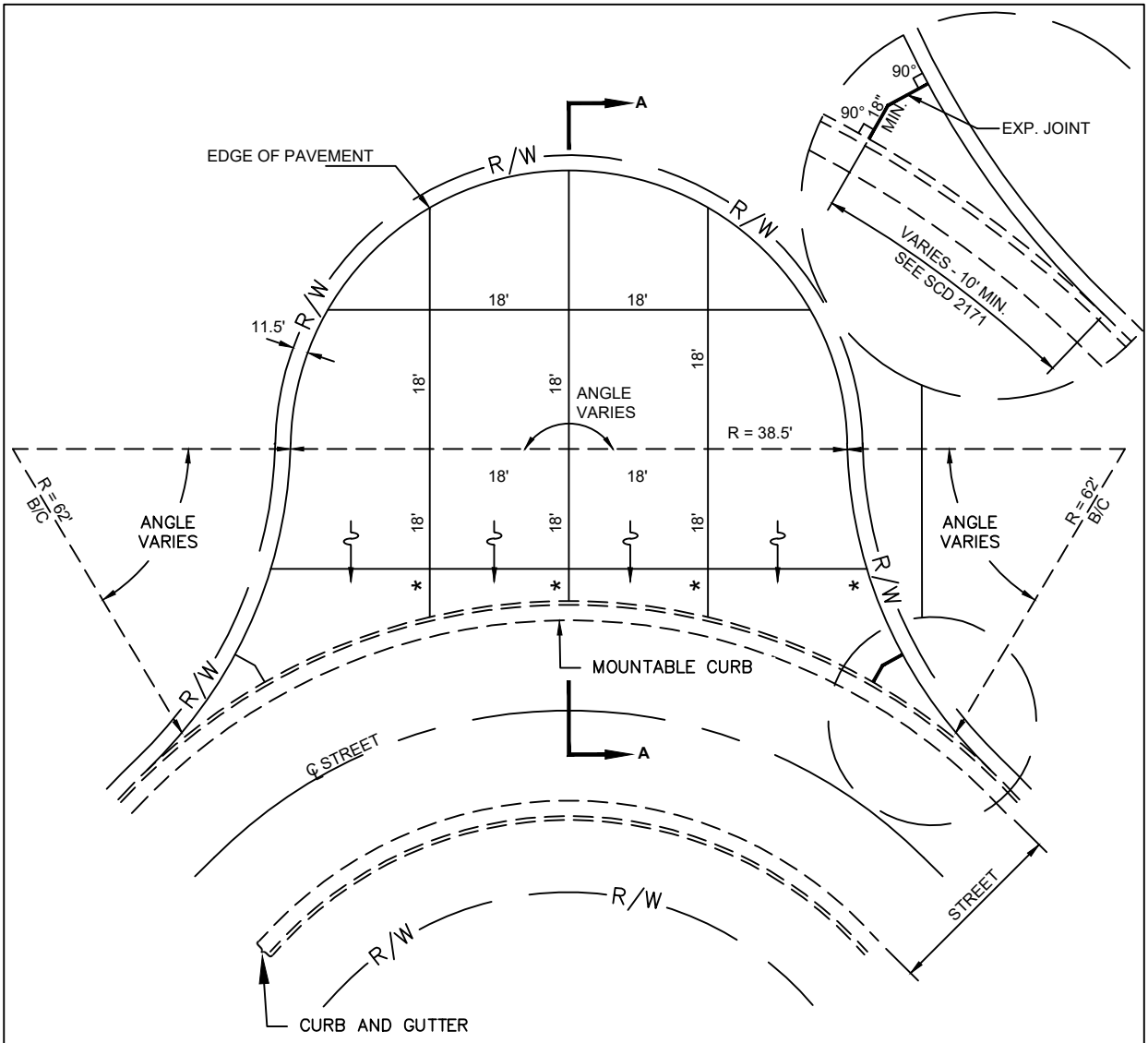

* VARIABLE - 2' MIN, 18' MAX

EYEBROW SHALL HAVE CONTINUOUS POSITIVE DRAINAGE TO STREET

JOINT SPACING DETAIL

EYEBROW

CITY OF COLUMBUS, OHIO
DEPARTMENT OF PUBLIC SERVICE
DIVISION OF DESIGN AND CONSTRUCTION

CITY ENGINEER

STD DWG
2154

12/31/2018

SHT 1 OF 2

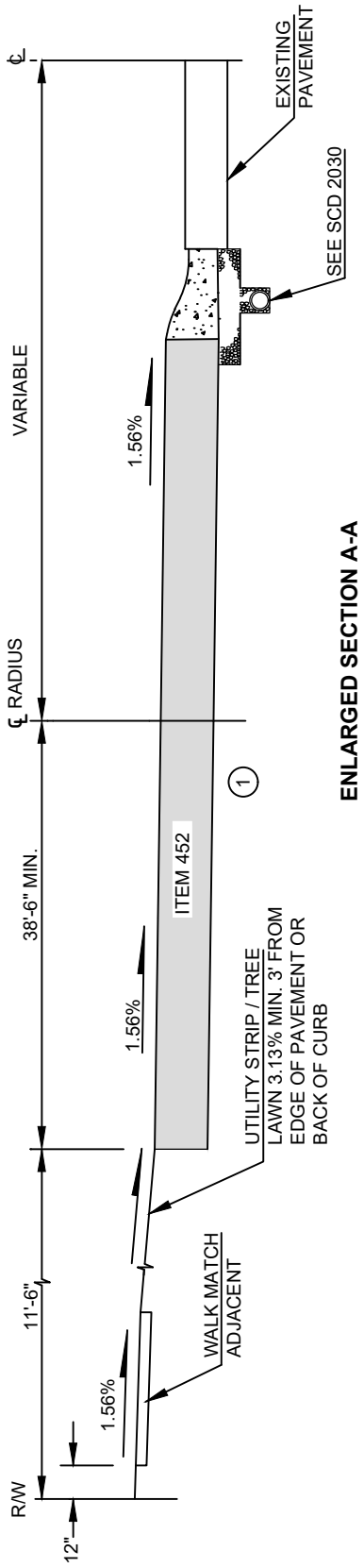

1 ITEM 452 - 7" NON-REINFORCED CONCRETE PAVEMENT.

TYPICAL SECTION
COMBINATION CURB &
GUTTER, TYPE MOUNTABLE

EYEBROW

CITY OF COLUMBUS, OHIO
DEPARTMENT OF PUBLIC SERVICE
DIVISION OF DESIGN AND CONSTRUCTION

STD DWG
2154
12/31/2018
SHT 2 OF 2

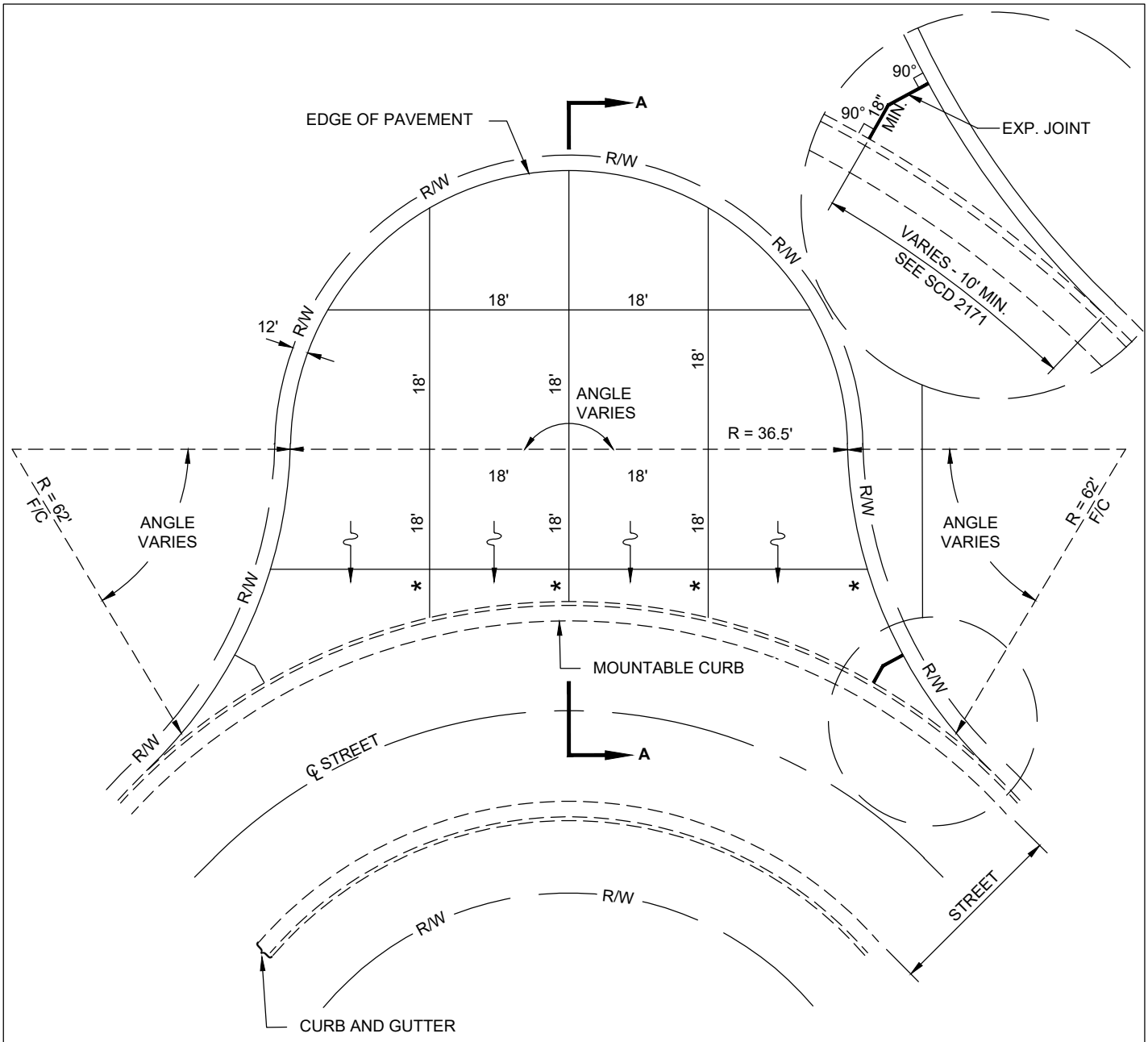

* VARIABLE - 2' MIN, 18' MAX

EYEBROW SHALL HAVE CONTINUOUS POSITIVE DRAINAGE TO STREET

JOINT SPACING DETAIL

EYEBROW

CITY OF COLUMBUS, OHIO
DEPARTMENT OF PUBLIC SERVICE
DIVISION OF DESIGN AND CONSTRUCTION

CITY ENGINEER

STD DWG
2154

06/01/18

SHT 1 OF 2

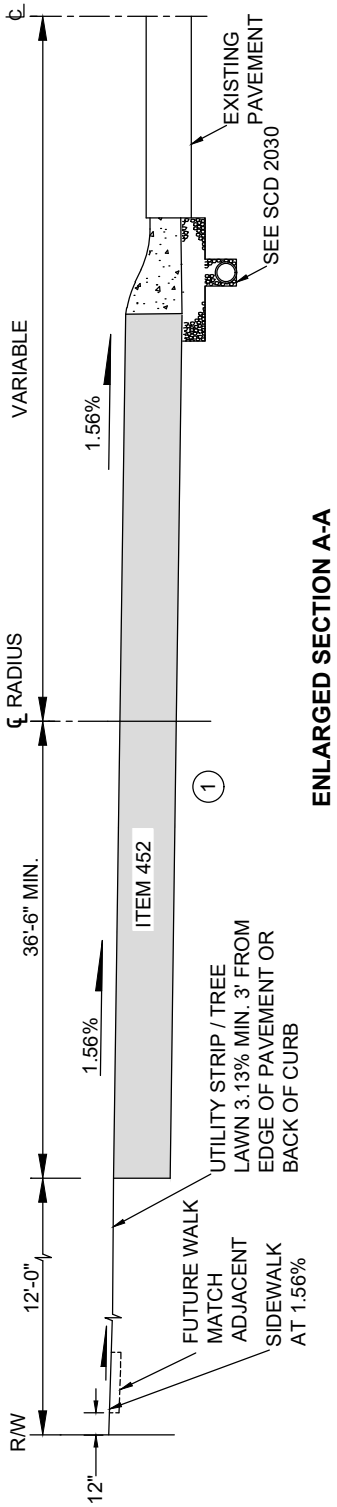

ENLARGED SECTION A-A

1 ITEM 452 - 7" NON-REINFORCED CONCRETE PAVEMENT.

TYPICAL SECTION
COMBINATION CURB &
GUTTER, TYPE MOUNTABLE

EYEBROW

CITY OF COLUMBUS, OHIO
DEPARTMENT OF PUBLIC SERVICE
DIVISION OF DESIGN AND CONSTRUCTION

STD DWG
2154

06/01/18

SHT 2 OF 2

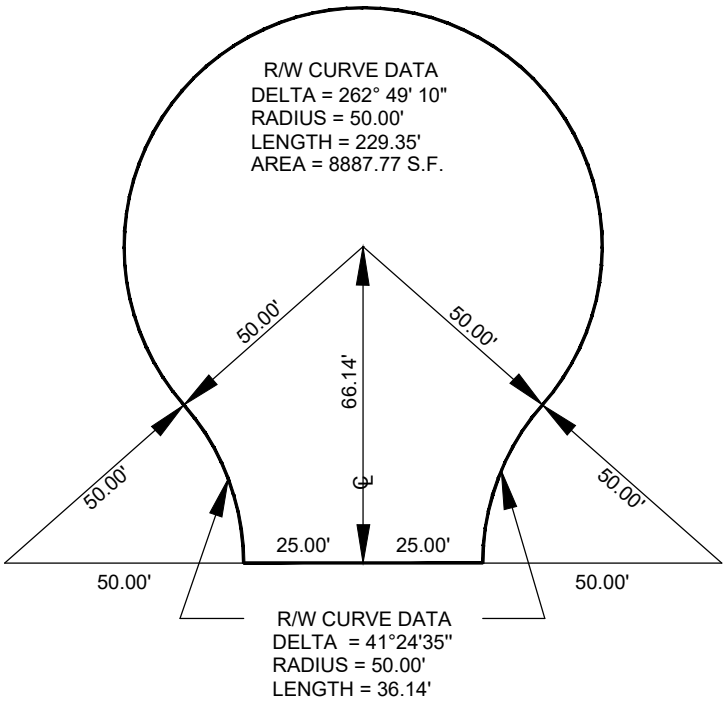

NOTE: ALL DIMENSIONS SHOWN ARE FOR RIGHT-OF-WAY ONLY.

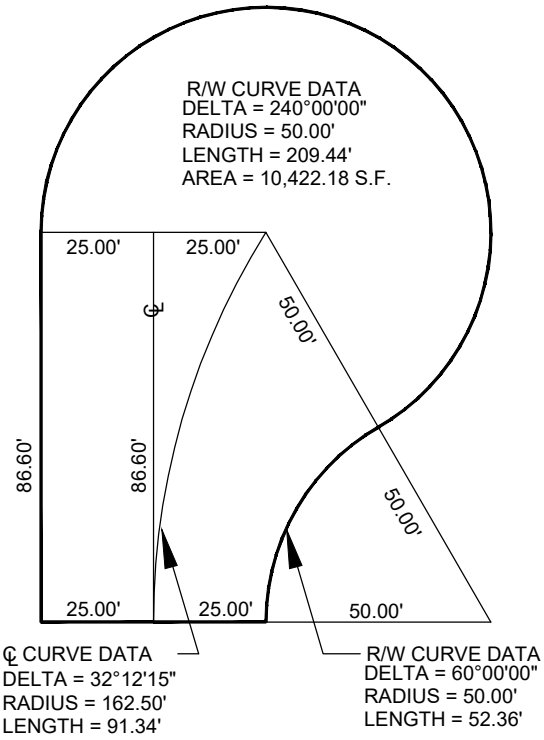

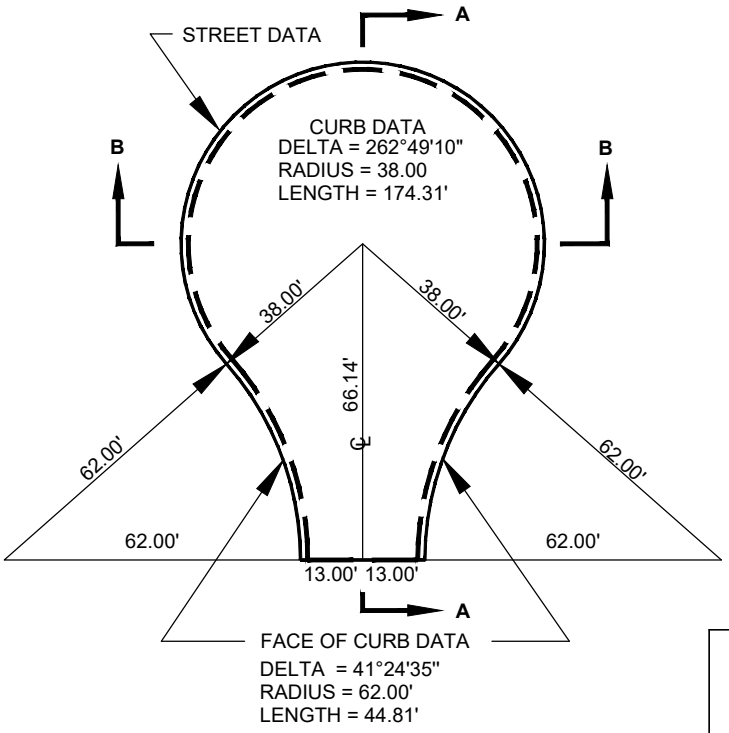

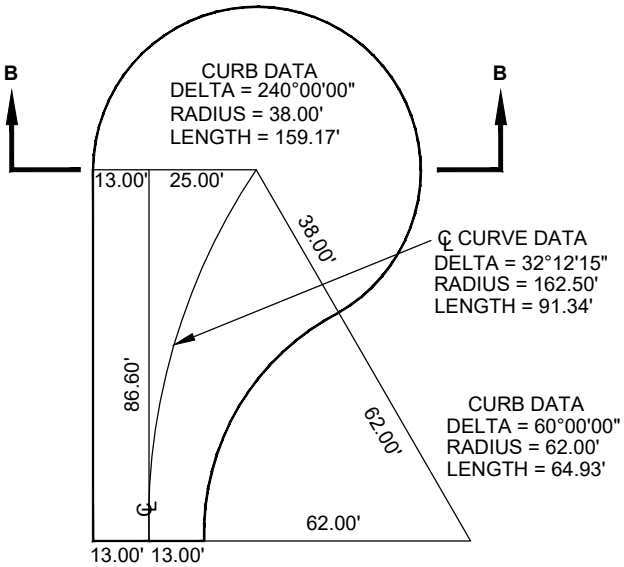

PAVEMENT AREA

PAVEMENT AREA ONLY

AREA = 5102.09 Sq. Ft.

NOTE: ALL DIMENSIONS SHOWN ARE TO FACE OF CURB ONLY.

CUL-DE-SAC FOR 26' WIDE STREET ON A 50' RIGHT-OF-WAY

CITY OF COLUMBUS, OHIO
DEPARTMENT OF PUBLIC SERVICE
DIVISION OF DESIGN AND CONSTRUCTION

CITY ENGINEER

STD DWG
2156

04/30/18

SHT 1 OF 3

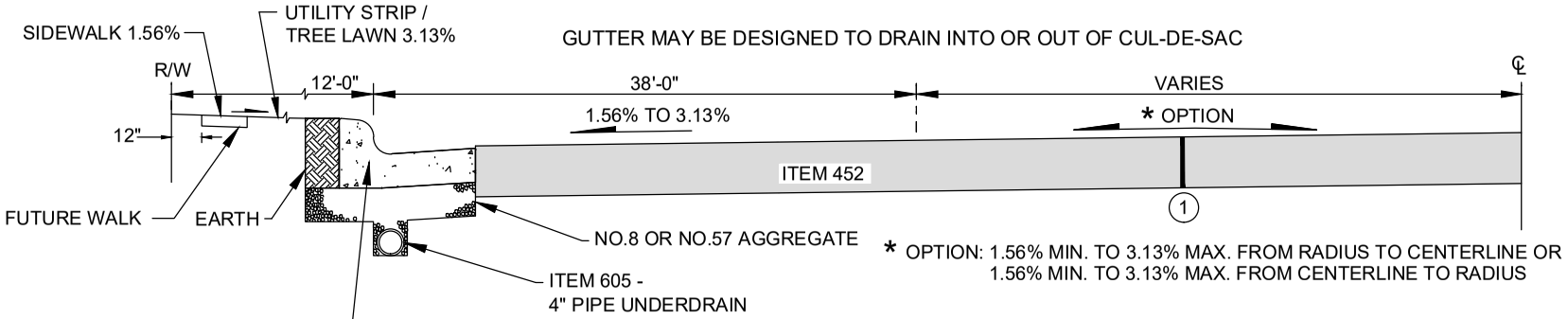

ENLARGED SECTION A-A

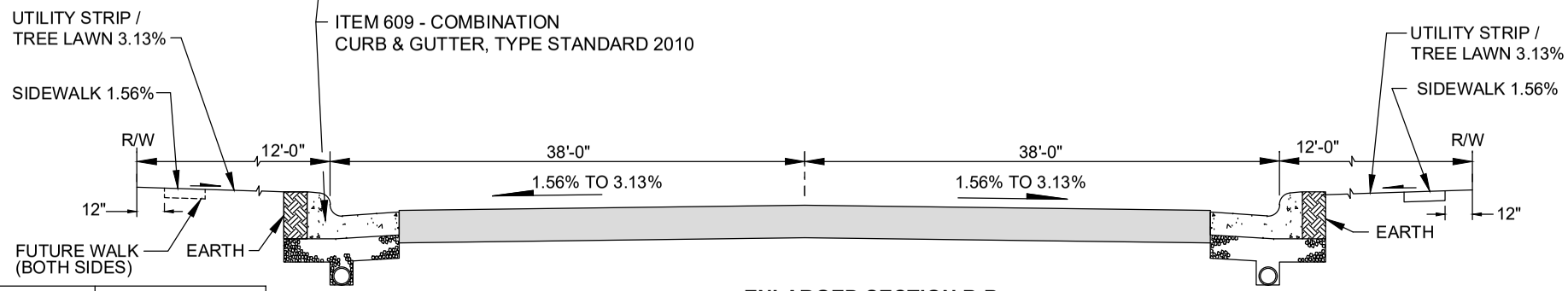

ENLARGED SECTION B-B

SAW CONTRACTION JOINTS PER STANDARD DRAWING 2156, SHEET 3 OF 3.

THE TYPE OF CURB AROUND THE CUL-DE-SAC SHALL BE THE SAME AS THE TYPE USED ON THE ADJACENT STREET.

(1) ITEM 452 - 7" NON-REINFORCED CONCRETE PAVEMENT.

TYPICAL SECTION
COMBINATION CURB &
GUTTER, TYPE STANDARD

CUL-DE-SAC
FOR 26' WIDE STREET
ON A 50' RIGHT-OF-WAY

CITY OF COLUMBUS, OHIO
DEPARTMENT OF PUBLIC SERVICE
DIVISION OF DESIGN AND CONSTRUCTION

STD DWG
2156
04/30/18
SHT 2 OF 3

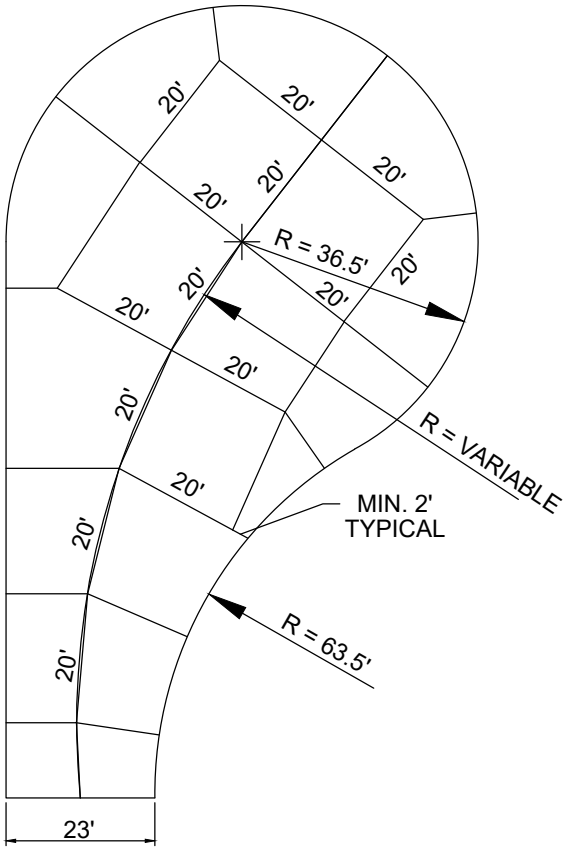

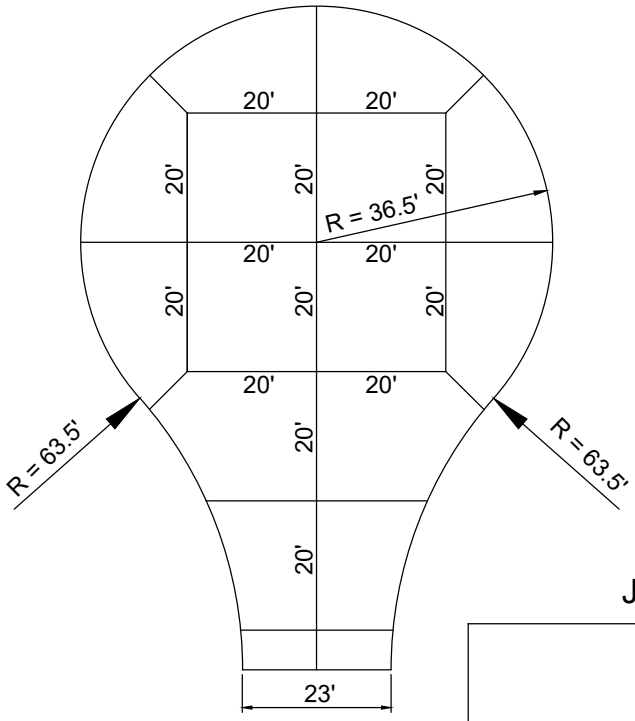

JOINT SPACING DETAIL

CUL-DE-SAC

NOTE: DETAIL APPLIES TO CONCRETE PAVEMENT OR CONCRETE BASE ONLY.

CITY OF COLUMBUS, OHIO
DEPARTMENT OF PUBLIC SERVICE
DIVISION OF DESIGN AND CONSTRUCTION

STD DWG
2156

04/30/18

SHT 3 OF 3

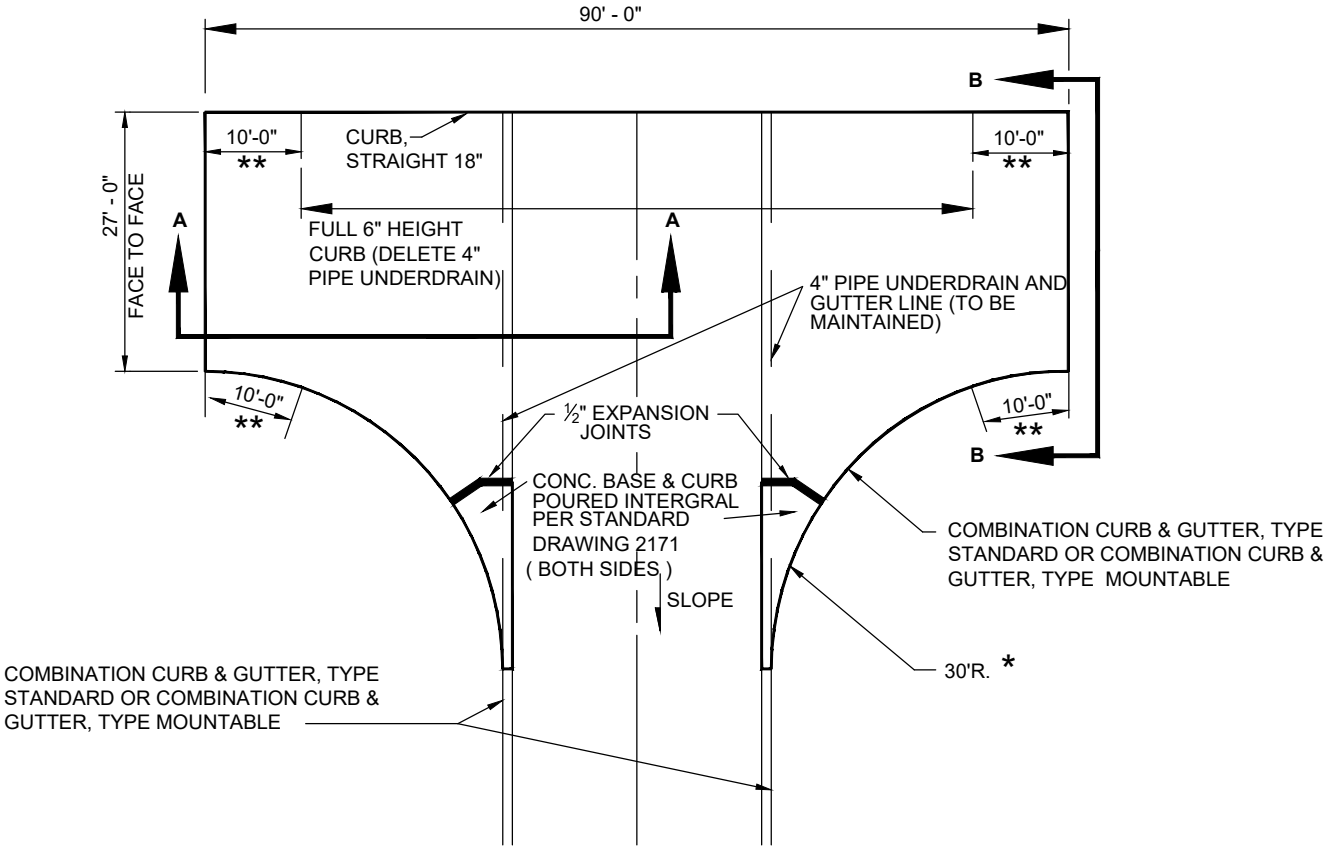

* 20' RADIUS IF 200' OR LESS FROM CENTERLINE OF STREET TO CENTERLINE OF TURNAROUND.

** TAPER CURB 6" TO 1".

UNDERDRAIN SHALL BE SLOPED FOR POSITIVE DRAINAGE TO CURB INLET.

R/W AND EASEMENTS FOR T-TURNAROUND TO BE DETERMINED DURING SITE DEVELOPMENT PHASE AND PLATTING PROCESS.

T - TURNAROUND

CITY OF COLUMBUS, OHIO
DEPARTMENT OF PUBLIC SERVICE
DIVISION OF DESIGN AND CONSTRUCTION

STD DWG
2157

04/30/18

CITY ENGINEER

SHT 1 OF 3

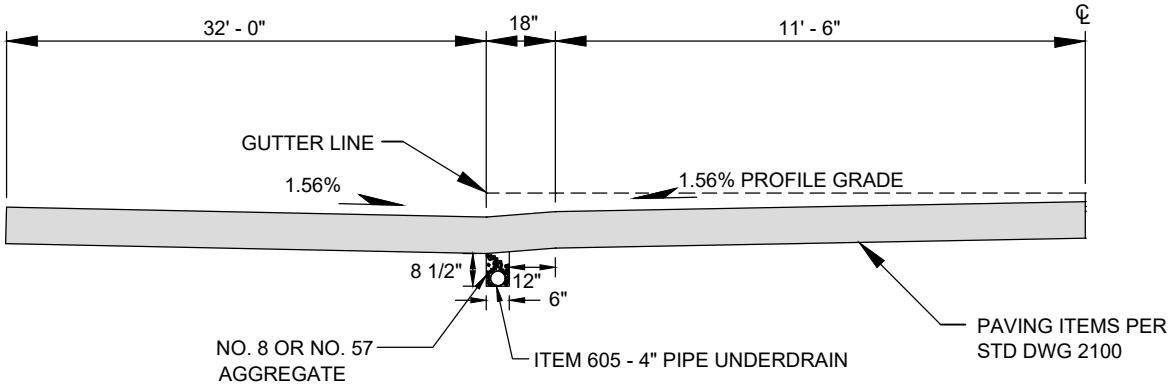

SECTION A - A

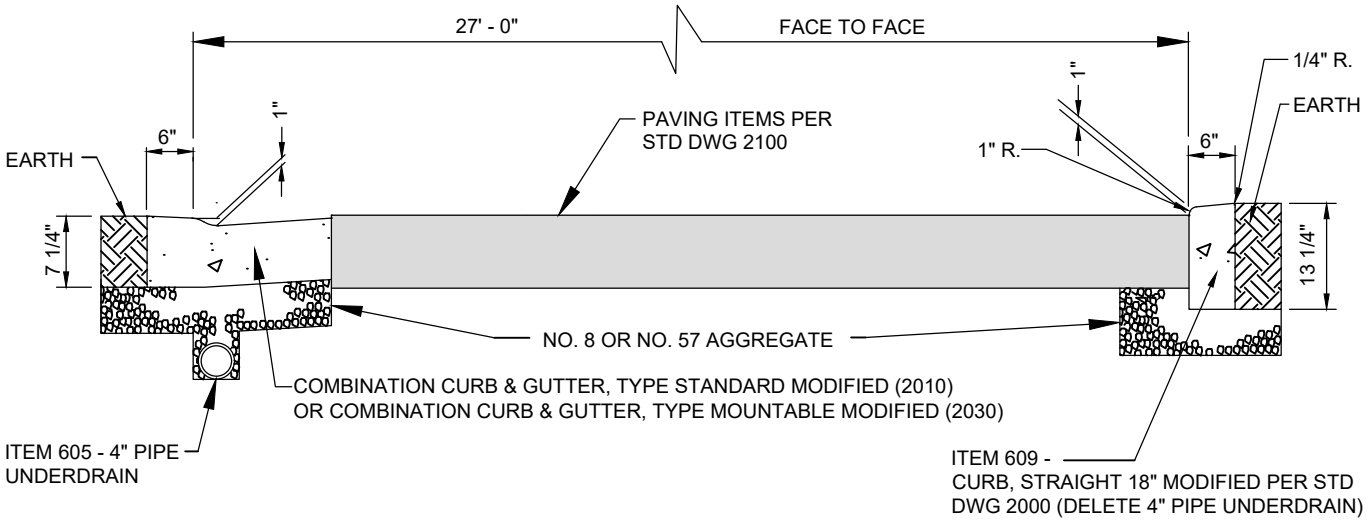

SECTION B - B

NOTE:
UNDERDRAINS SHALL BE SLOPED FOR
POSITIVE DRAINAGE TO CURB INLET.

TYPICAL SECTION

T - TURNAROUND

CITY OF COLUMBUS, OHIO
DEPARTMENT OF PUBLIC SERVICE
DIVISION OF DESIGN AND CONSTRUCTION

STD DWG
2157

04/30/18

SHT 2 OF 3

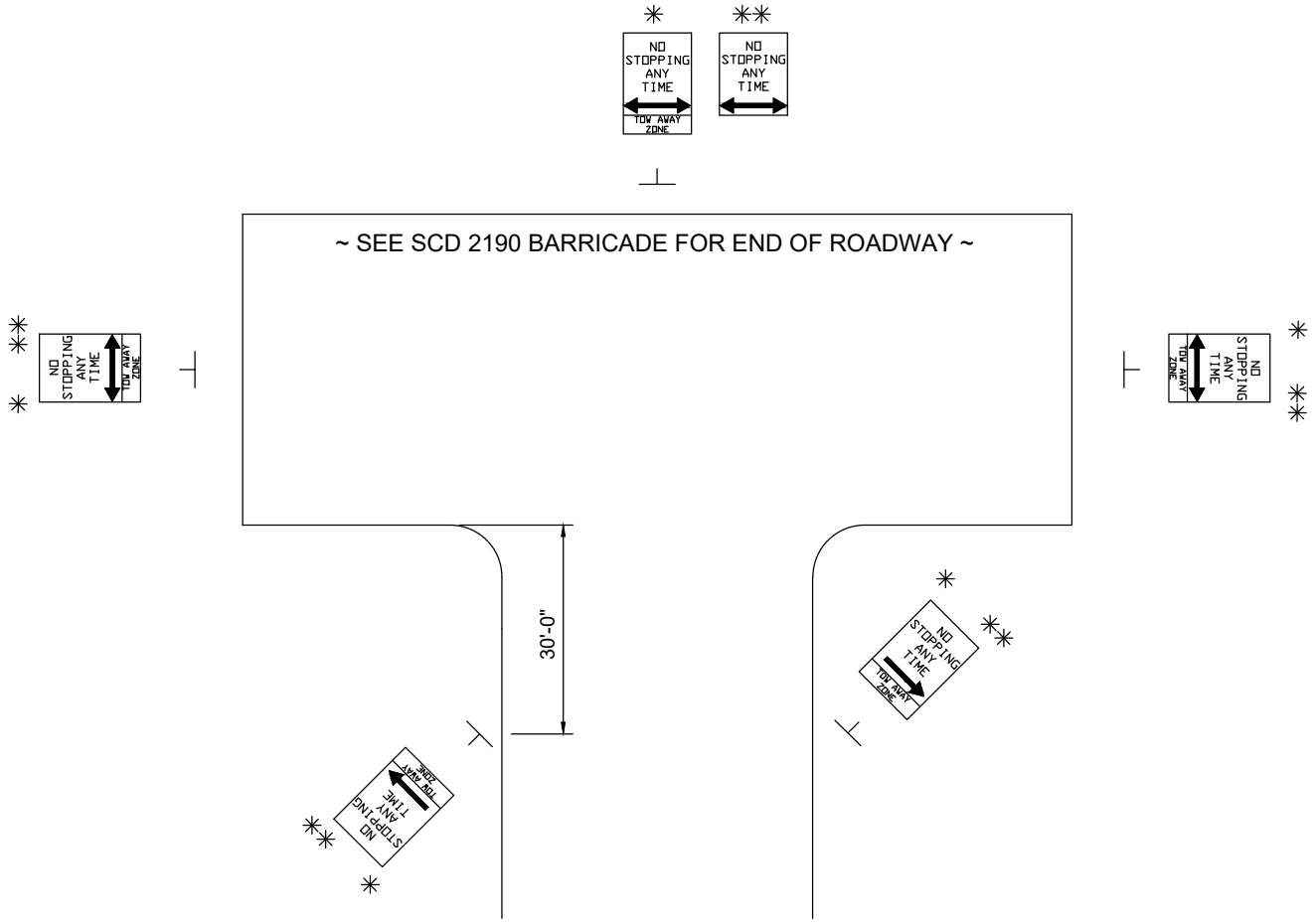

SIGNING SHALL BE INSTALLED TO KEEP TURNAROUND CLEAR FOR EMERGENCY VEHICLES. SIGNS ARE TO BE REMOVED IF AND WHEN THE STREET IS CUT THROUGH.

REFERENCE SUPPLEMENTAL SPECIFICATIONS 1630.

✳ FOR USE ON PRIVATE STREETS ONLY

CP-116.16 (L)(R)(D)
12"x 24"

✳✳ FOR USE ON PUBLIC R/W

CP-114.01 (L)(R)(D)
12"x 18"

⊥⊥ U-CHANNEL DRIVE POST

SIGNING

T - TURNAROUND

CITY OF COLUMBUS, OHIO
DEPARTMENT OF PUBLIC SERVICE
DIVISION OF DESIGN AND CONSTRUCTION

STD DWG
2157

04/30/18

SHT 3 OF 3

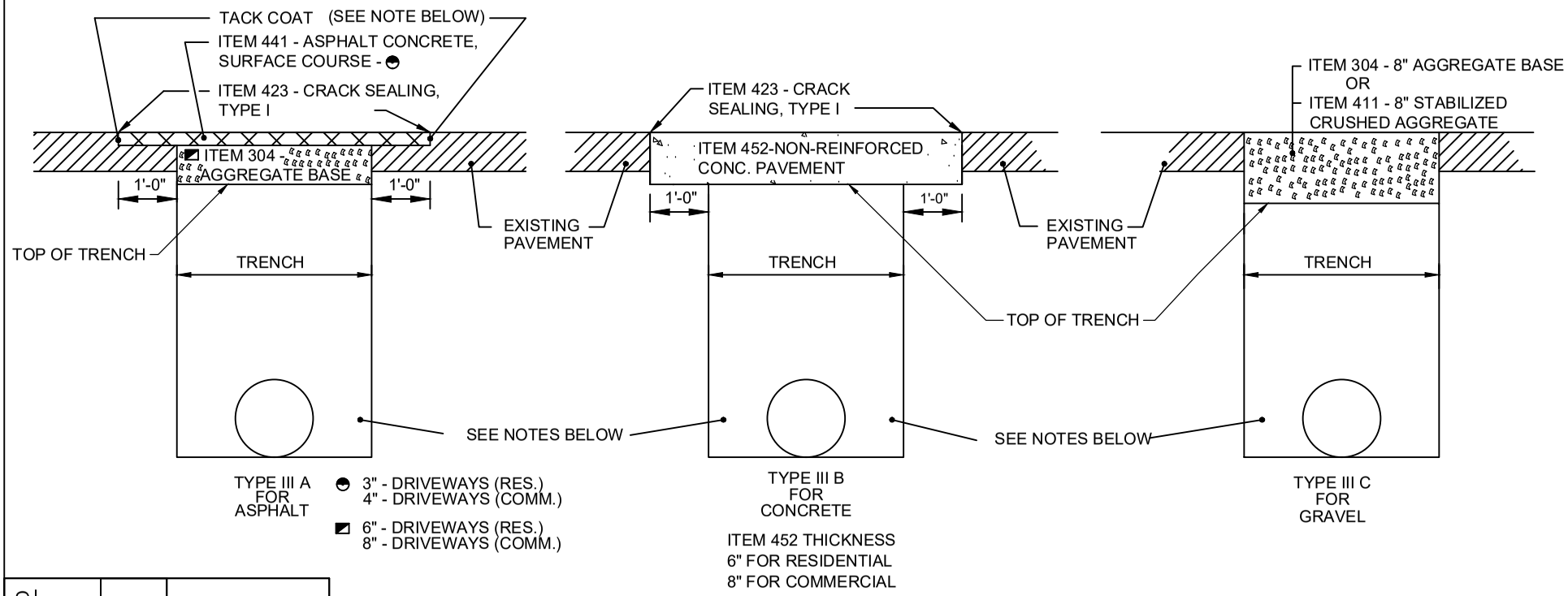

BACKFILL FOR ALL TRENCHES SHALL BE IN ACCORDANCE WITH APPLICABLE SPECIFICATIONS.

PERMANENT REPAVING SHALL NOT BE DONE UNTIL SO ORDERED OR APPROVED BY THE ENGINEER. THE EDGE SHALL BE CUT VERTICAL AND TRIMMED TO PROVIDE A STRAIGHT LINE.

ITEM 407 - TACK COAT SHALL BE APPLIED AT A RATE OF 0.08 GAL/SY.

ALL EXISTING CONCRETE WALKS OR CONCRETE PAVEMENTS BEING REPLACED SHALL BE REMOVED AT AN EXISTING JOINT AND REPLACED PER STANDARD DRAWING.

DRIVEWAY PAVEMENT SHALL BE REPLACED BY EITHER MATCHING THE EXISTING MATERIALS & THICKNESS, OR BY USING THE ABOVE THICKNESS, WHICHEVER IS GREATER.

IF COMPLETE DRIVE APPROACH IS BEING REBUILT REFERENCE THE STANDARD DRAWING APPLICABLE TO THE DRIVE.

DRIVEWAY REPLACEMENT

CITY OF COLUMBUS, OHIO
DEPARTMENT OF PUBLIC SERVICE
DIVISION OF DESIGN AND CONSTRUCTION

CITY ENGINEER

STD DWG
2160

04/30/18

SHT 1 OF 1

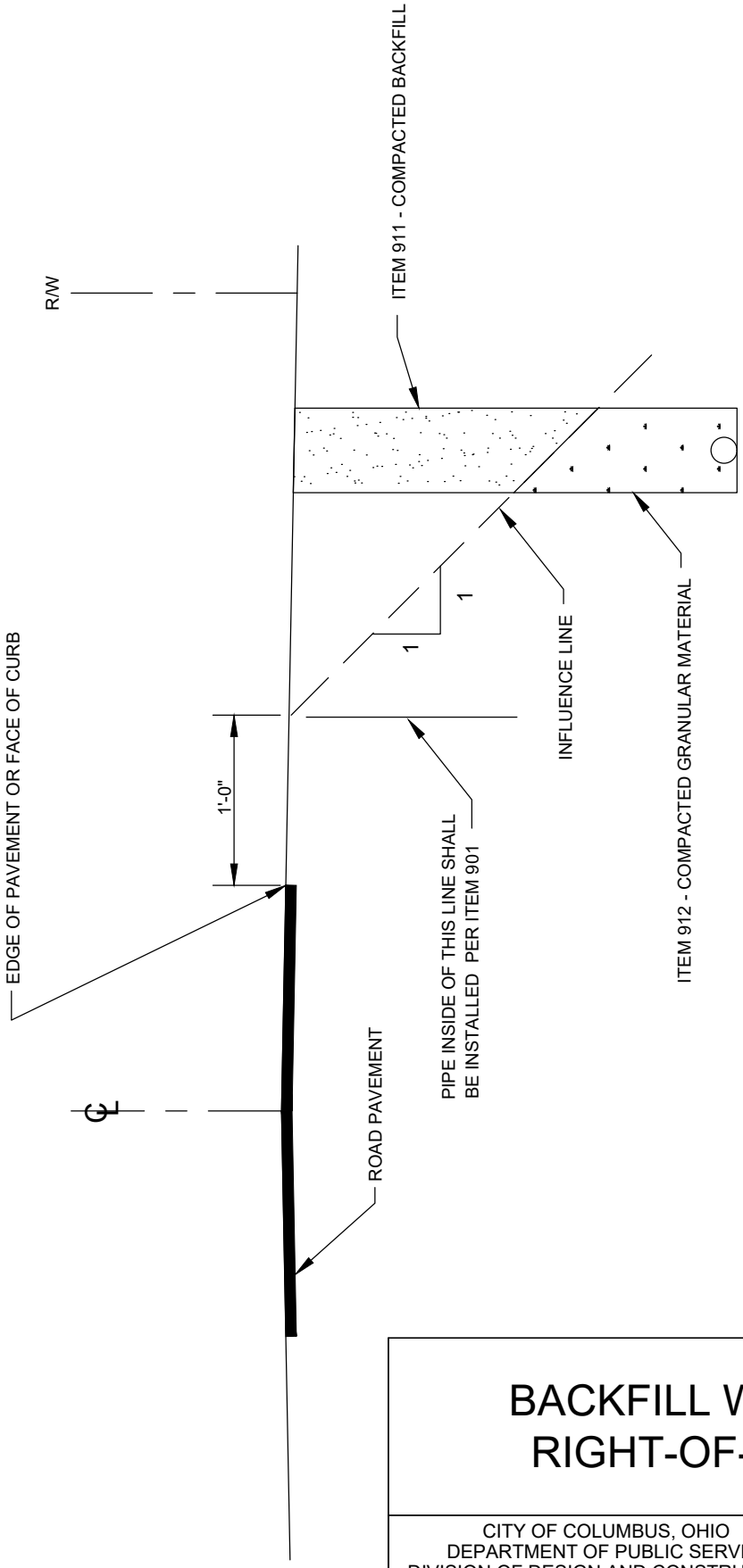

BACKFILL WITHIN RIGHT-OF-WAY

CITY OF COLUMBUS, OHIO
DEPARTMENT OF PUBLIC SERVICE
DIVISION OF DESIGN AND CONSTRUCTION

CITY ENGINEER

STD DWG
2179

12/31/18

SHT 1 OF 1

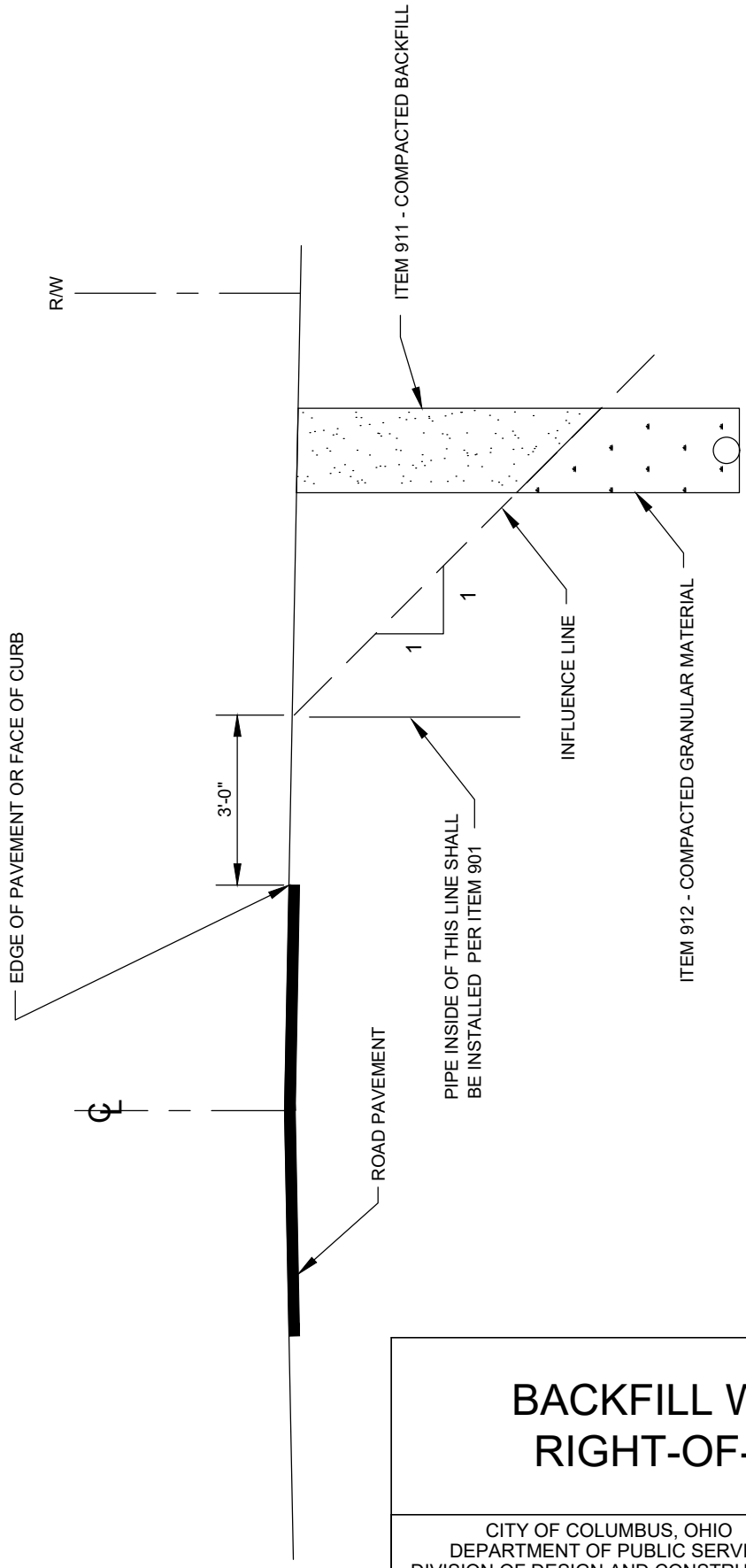

BACKFILL WITHIN RIGHT-OF-WAY

CITY OF COLUMBUS, OHIO
DEPARTMENT OF PUBLIC SERVICE
DIVISION OF DESIGN AND CONSTRUCTION

CITY ENGINEER

STD DWG
2179

04/30/18

SHT 1 OF 1

FOR USE ON A PARCEL WITH A SINGLE DWELLING

* CURB OR COMBINED CURB AND GUTTER SHALL BE TAKEN OUT AND REPLACED WITH CONCRETE, SEPARATED FROM THE DRIVE BY 1/2" PREMOLDED EXPANSION JOINT. WHEN LESS THAN 5 FT. OF A CURB SECTION REMAINS AFTER THE CURB CUT IS LOCATED, IT SHALL ALSO BE REMOVED AND REPLACED. CURB SHALL BE CONSTRUCTED IN MINIMUM 5 FT. SECTIONS AND MAXIMUM 10 FT. SECTIONS.

** SIDEWALK WIDTH SHALL BE PER STANDARD DRAWING 2300. SIDEWALK THICKNESS SHALL BE 6" CONCRETE TO ONE FULL PANEL (MIN. 5 FT.) BEYOND THE EDGE OF THE FULL WIDTH SECTION OF THE DRIVE.

*** 5 FT. ON ROADWAYS WITH 35 MPH SPEED LIMIT, 2 FT. FOR SPEED LIMITS LESS THAN 35 MPH.

PAR = PEDESTRIAN ACCESS ROUTE. SET PAR THROUGH APPROACH AT SIDEWALK GRADE TO AVOID RAMP OR TRANSITION. IF NOT POSSIBLE, THEN MINIMIZE TRANSITION FROM SIDEWALK TO APPROACH.

WHEN A CURB OR CURB AND GUTTER ARE PRESENT ALL DRIVEWAYS SHALL BE ITEM 452 CONCRETE PAVEMENT

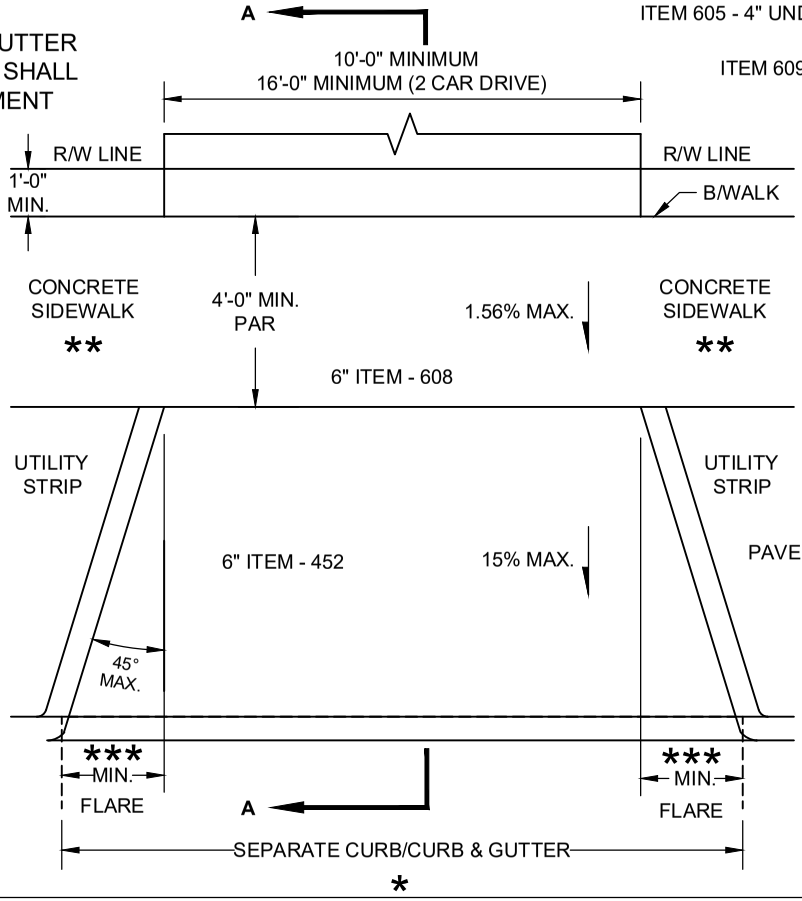

CURBED ROADWAY, WITH UTILITY STRIP, RIGID

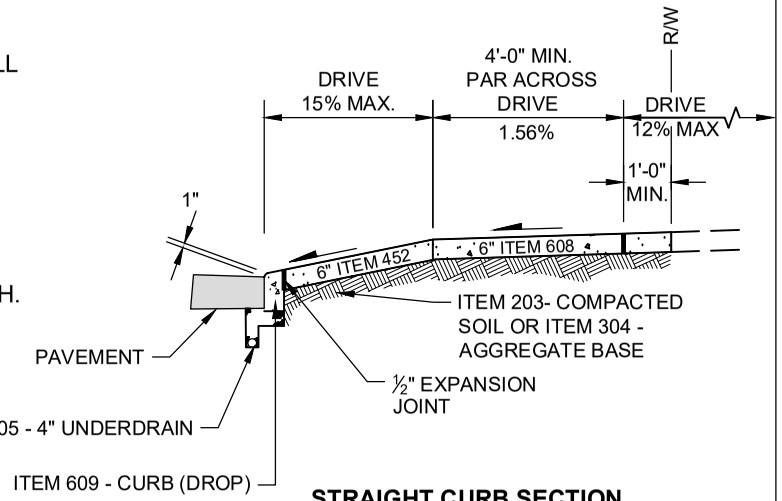

STRAIGHT CURB SECTION
SECTION A-A

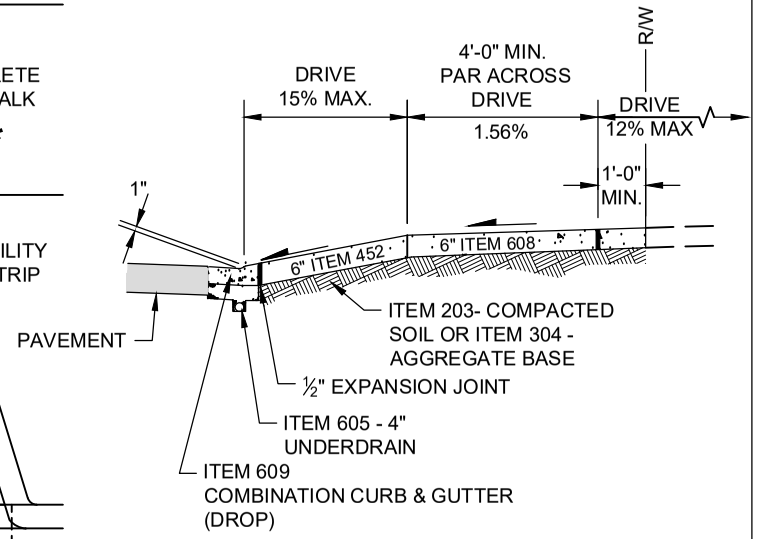

COMBINATION CURB AND GUTTER SECTION
SECTION A-A

DRIVEWAY, RESIDENTIAL

CITY OF COLUMBUS, OHIO
DEPARTMENT OF PUBLIC SERVICE
DIVISION OF DESIGN AND CONSTRUCTION

CITY ENGINEER

STD DWG
2201

12/31/18

SHT 1 OF 6

* THE FIRST FULL PANEL AT THE EDGE OF THE FULL WIDTH SECTION OF THE DRIVE INCLUDING THE DRIVE FLARE SHALL BE 6" ITEM 608

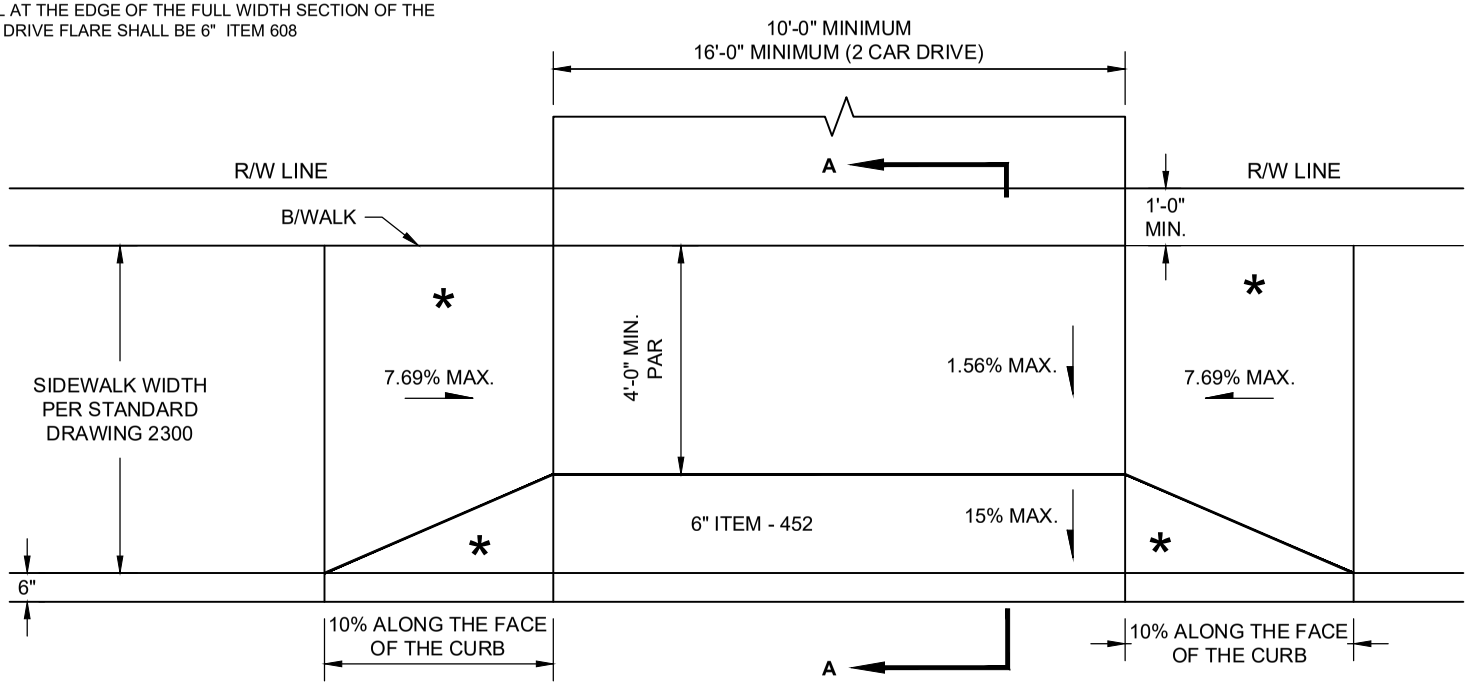

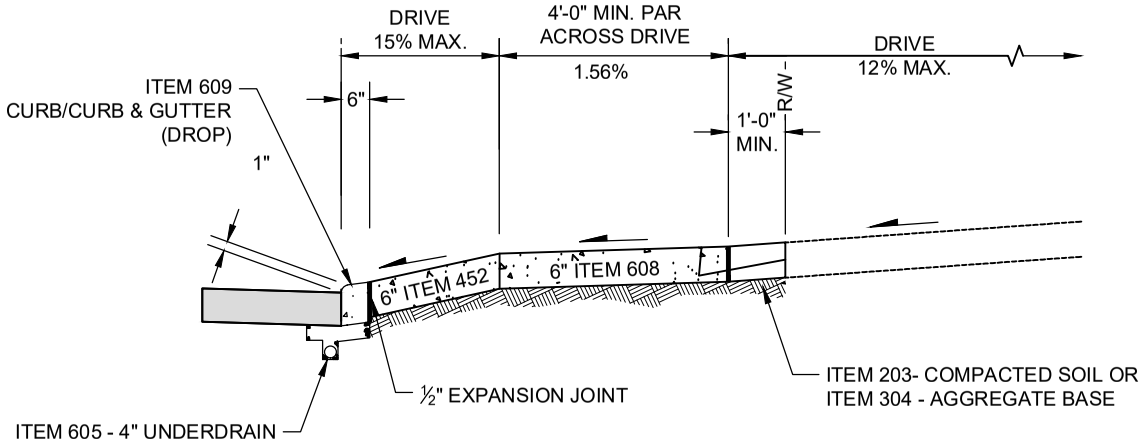

SECTION A-A

SEE SHEET 1 OF 6 FOR NOTES

CURBED ROADWAY, TYPE A, RIGID

DRIVEWAY, RESIDENTIAL

CITY OF COLUMBUS, OHIO
DEPARTMENT OF PUBLIC SERVICE
DIVISION OF DESIGN AND CONSTRUCTION

STD DWG
2201
12/03/18
SHT 2 OF 6

* USE WHEN FRONT RAMP OF DRIVE IS LONGER THAN 2 FT. MAINTAIN R/W CLEARANCE FOR WALK.

** THE FIRST FULL PANEL AT THE EDGE OF THE FULL WIDTH SECTION OF THE DRIVE INCLUDING THE DRIVE FLARE SHALL BE 6" ITEM 608

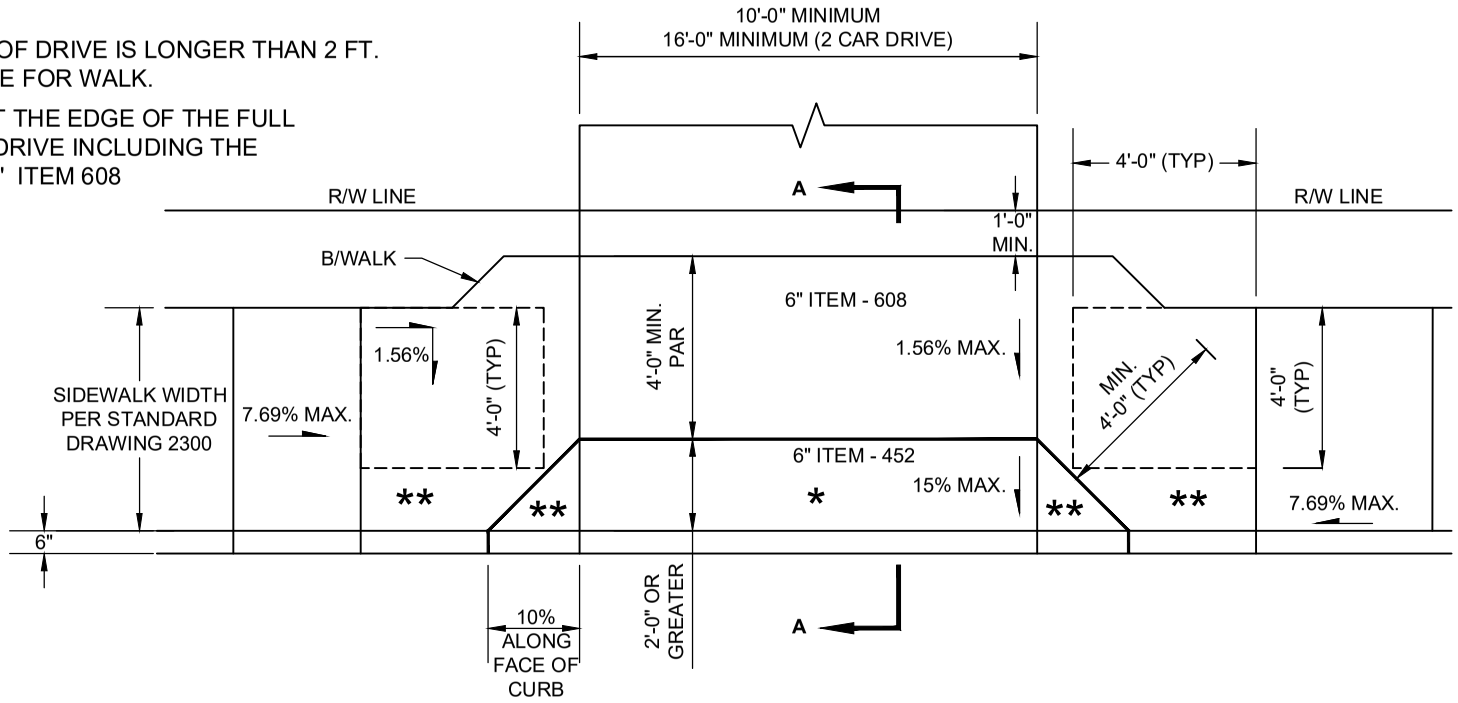

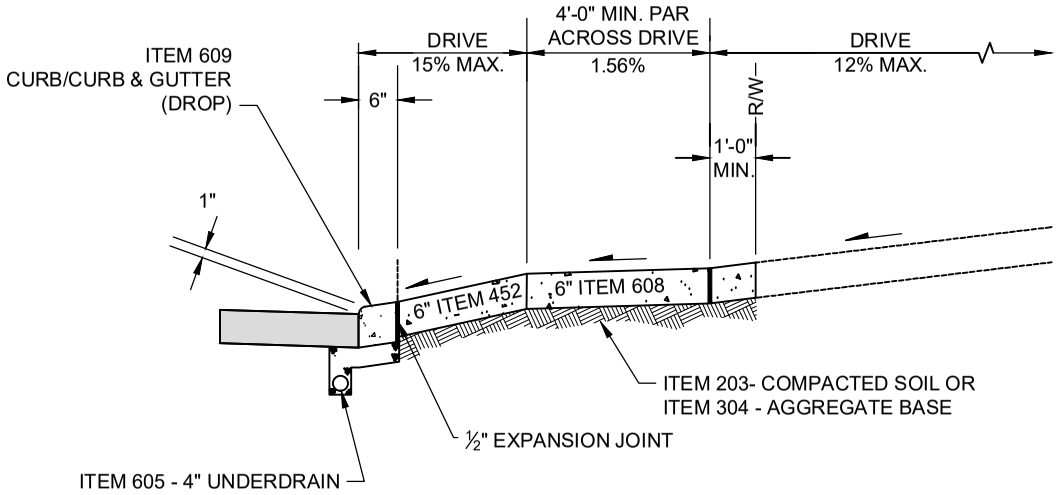

SECTION A-A

SEE SHEET 1 OF 6 FOR NOTES

CURBED ROADWAY, TYPE B, RIGID

DRIVEWAY, RESIDENTIAL

CITY OF COLUMBUS, OHIO
DEPARTMENT OF PUBLIC SERVICE
DIVISION OF DESIGN AND CONSTRUCTION

STD DWG
2201
12/31/18

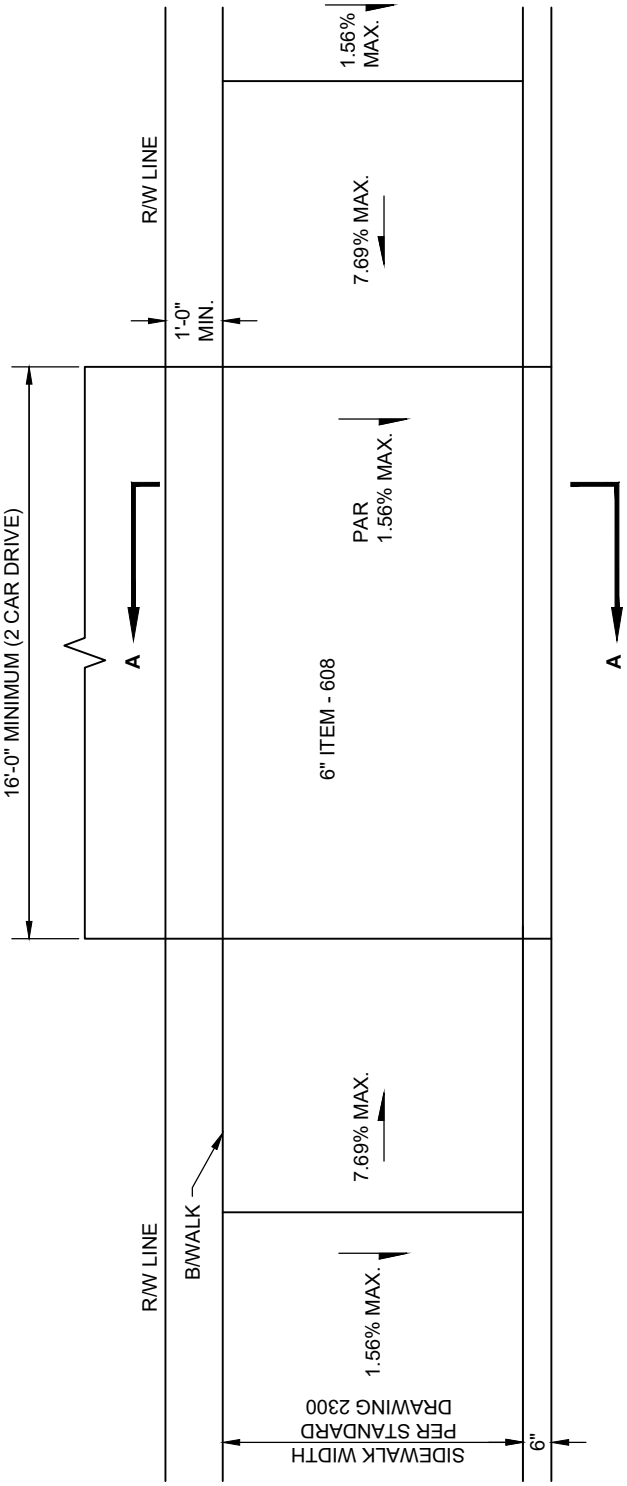

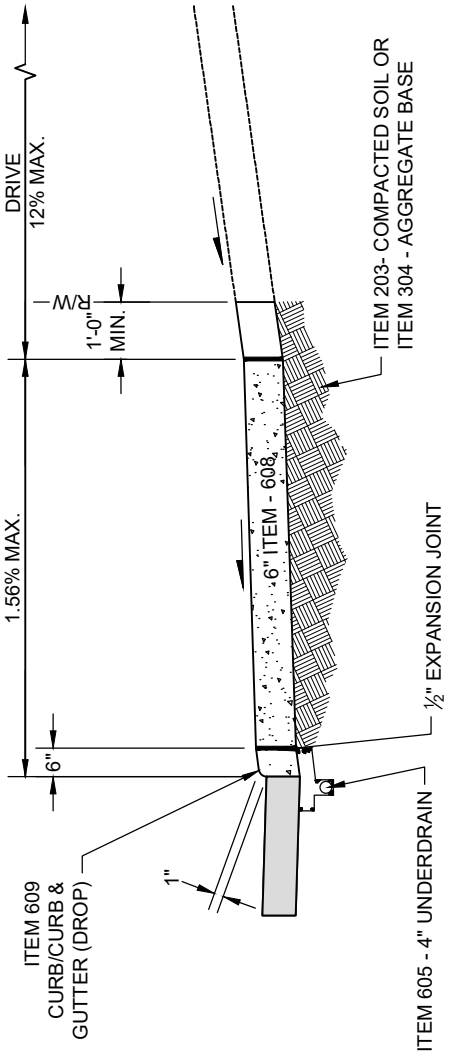

SECTION A-A
SEE SHEET 1 OF 6 FOR NOTES

CURBED ROADWAY, TYPE C, RIGID

DRIVEWAY, RESIDENTIAL

CITY OF COLUMBUS, OHIO
DEPARTMENT OF PUBLIC SERVICE
DIVISION OF DESIGN AND CONSTRUCTION

STD DWG
2201
12/31/18
SHT 4 OF 6

FOR USE ON A PARCEL WITH A SINGLE DWELLING

* REPLACEMENT OF EXISTING DRIVES SHALL MATCH PAVEMENT (TYPE, DESIGN) IN KIND TO EXISTING DRIVE. NEW DRIVES SHALL BE PAVEMENT (TYPE, DESIGN) SIMILAR TO MAIN ROADWAY (TYPE, DESIGN).

DRIVE PAVEMENT (TYPE, FLEXIBLE)

ITEM 441 - 1.5" ASPHALT CONCRETE, SURFACE COURSE, (TYPE 1), PG 64-22

ITEM 441 - 2.5" ASPHALT CONCRETE, INTERMEDIATE COURSE, (TYPE 2),448

ITEM 304 - 4" AGGREGATE BASE

** SIDEWALK SHALL BE PER STANDARD DRAWING 2300. SIDEWALK THICKNESS SHALL BE 6" CONCRETE TO ONE FULL PANEL (MIN. 5 FT.) BEYOND THE EDGE OF THE FULL WIDTH SECTION OF THE DRIVE.

PAR = PEDESTRIAN ACCESS ROUTE. SET PAR THROUGH APPROACH AT SIDEWALK GRADE TO AVOID RAMP OR TRANSITION. IF NOT POSSIBLE, THEN MINIMIZE TRANSITION FROM SIDEWALK TO APPROACH.

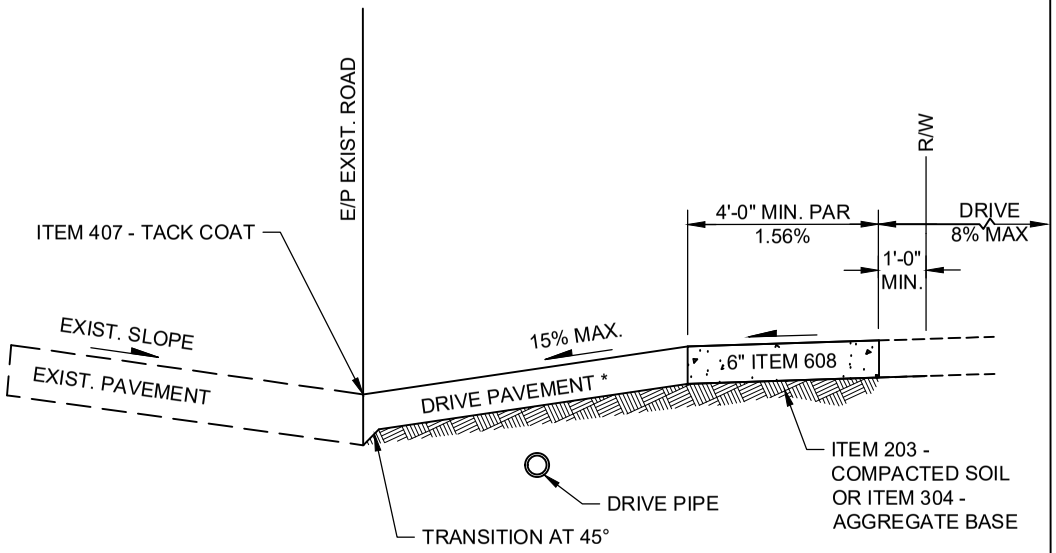

SECTION A-A

WHEN CONDITIONS EXIST USE THE FOLLOWING;
IF THE DISTANCE FROM THE SIDEWALK TO THE EDGE OF PAVEMENT IS:

>5' ----- HOLD THE FLARE TO 45* AND ADJUST THE WIDTH ACCORDINGLY, MAINTAIN THE MINIMUM 2' WIDE PERPENDICULAR AREA OF THE APPROACH

5'-7' --- MAINTAIN THE 5' MAXIMUM FLARE WIDTH, VARY THE ANGLE, AND MAINTAIN THE MINIMUM 2' WIDE PERPENDICULAR AREA OF THE APPROACH

>7' ----- DECREASE THE 45* ANGLE (ADJUST ACCORDINGLY), MAINTAIN THE MINIMUM 2' WIDE PERPENDICULAR AREA OF THE APPROACH

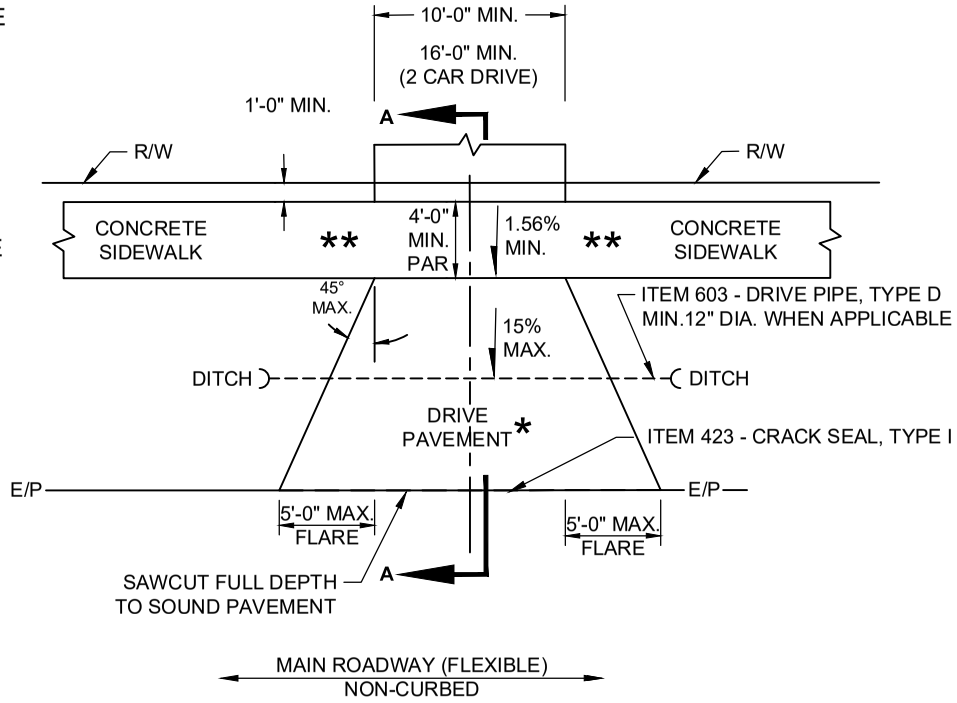

DRIVEWAY, RESIDENTIAL

NON-CURBED ROADWAY,
DRIVE PAVEMENT FLEXIBLE

CITY OF COLUMBUS, OHIO
DEPARTMENT OF PUBLIC SERVICE
DIVISION OF DESIGN AND CONSTRUCTION

STD DWG
2201

12/31/18

SHT 5 OF 6

FOR USE ON A PARCEL WITH A SINGLE DWELLING

* DRIVE PAVEMENT (TYPE, RIGID)
ITEM 452 - 6" NON-REINFORCED PORTLAND CEMENT CONCRETE

** SIDEWALK SHALL BE PER STANDARD DRAWING 2300. SIDEWALK THICKNESS SHALL BE 6" CONCRETE TO ONE FULL PANEL (MIN. 5 FT.) BEYOND THE EDGE OF THE FULL WIDTH SECTION OF THE DRIVE.

PAR = PEDESTRIAN ACCESS ROUTE. SET PAR THROUGH APPROACH AT SIDEWALK GRADE TO AVOID RAMP OR TRANSITION. IF NOT POSSIBLE, THEN MINIMIZE TRANSITION FROM SIDEWALK TO APPROACH.

WHEN CONDITIONS EXIST USE THE FOLLOWING;
IF THE DISTANCE FROM THE SIDEWALK TO THE EDGE OF PAVEMENT IS:

>5' ----- HOLD THE FLARE TO 45* AND ADJUST THE WIDTH ACCORDINGLY, MAINTAIN THE MINIMUM 2' WIDE PERPENDICULAR AREA OF THE APPROACH
5'-7' ---- MAINTAIN THE 5' MAXIMUM FLARE WIDTH, VARY THE ANGLE, AND MAINTAIN THE MINIMUM 2' WIDE PERPENDICULAR AREA OF THE APPROACH
>7' ----- DECREASE THE 45* ANGLE (ADJUST ACCORDINGLY), MAINTAIN THE MINIMUM 2' WIDE PERPENDICULAR AREA OF THE APPROACH

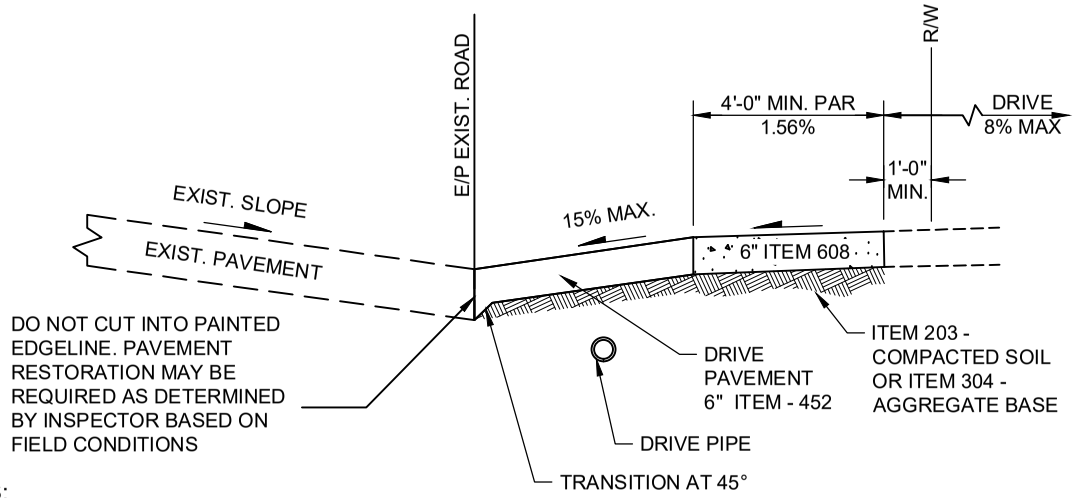

SECTION A-A

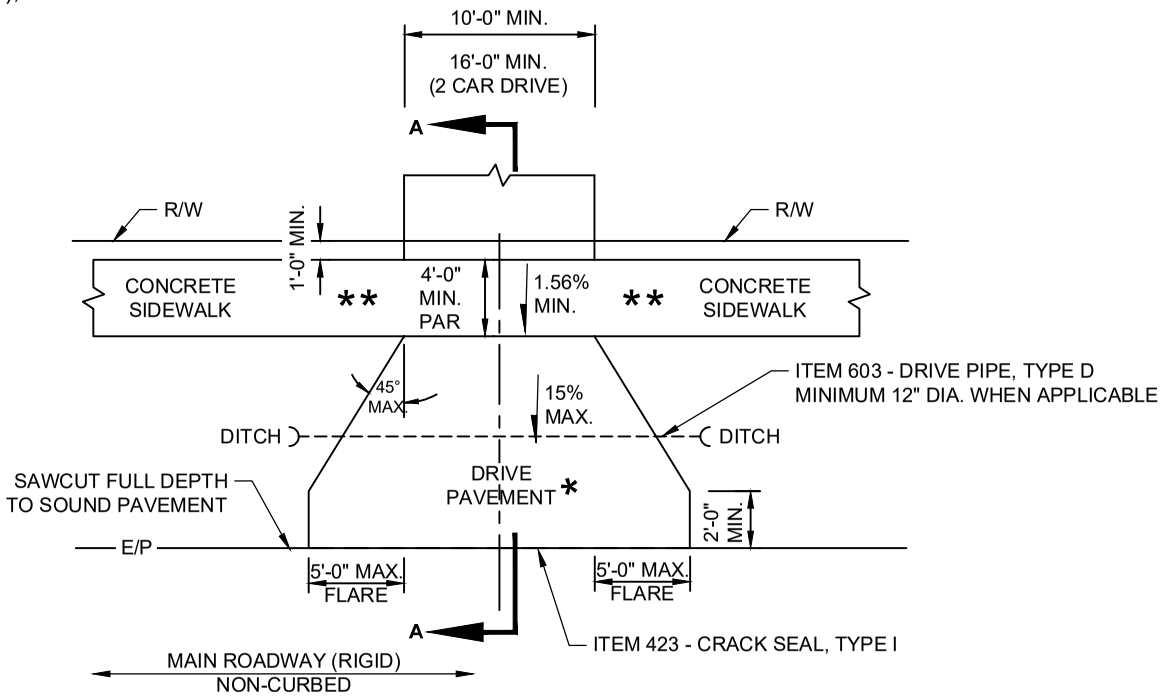

NON-CURBED ROADWAY
DRIVE PAVEMENT, RIGID

DRIVEWAY, RESIDENTIAL

CITY OF COLUMBUS, OHIO
DEPARTMENT OF PUBLIC SERVICE
DIVISION OF DESIGN AND CONSTRUCTION

STD DWG
2201
12/31/18
SHT 6 OF 6

FOR USE ON A PARCEL WITH A SINGLE DWELLING

* CURB OR COMBINED CURB AND GUTTER SHALL BE TAKEN OUT AND REPLACED WITH CONCRETE, SEPARATED FROM THE DRIVE BY 1/2" PREMOLDED EXPANSION JOINT. WHEN LESS THAN 5 FT. OF A CURB SECTION REMAINS AFTER THE CURB CUT IS LOCATED, IT SHALL ALSO BE REMOVED AND REPLACED. CURB SHALL BE CONSTRUCTED IN MINIMUM 5 FT. SECTIONS AND MAXIMUM 10 FT. SECTIONS.

** SIDEWALK WIDTH SHALL BE PER STANDARD DRAWING 2300. SIDEWALK THICKNESS SHALL BE 6" CONCRETE TO ONE FULL PANEL (MIN. 5 FT.) BEYOND EDGE OF DRIVE.

*** 5 FT. ON ROADWAYS WITH 35 MPH SPEED LIMIT, 2 FT. FOR SPEED LIMITS LESS THAN 35 MPH.

PAR = PEDESTRIAN ACCESS ROUTE. SET PAR THROUGH APPROACH AT SIDEWALK GRADE TO AVOID RAMP OR TRANSITION. IF NOT POSSIBLE, THEN MINIMIZE TRANSITION FROM SIDEWALK TO APPROACH.

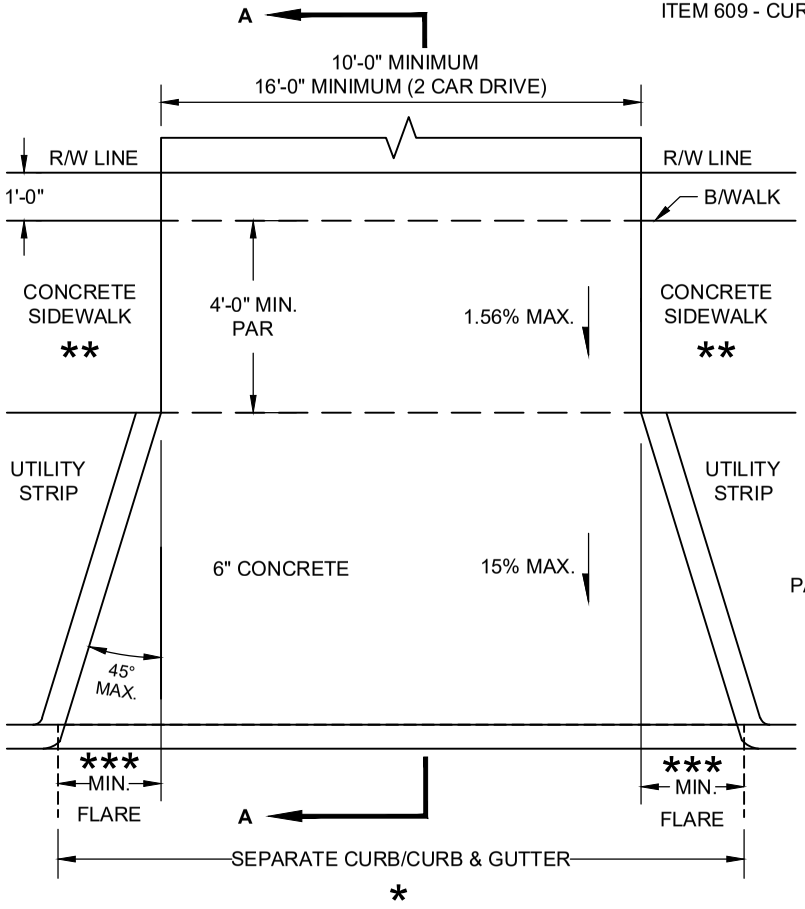

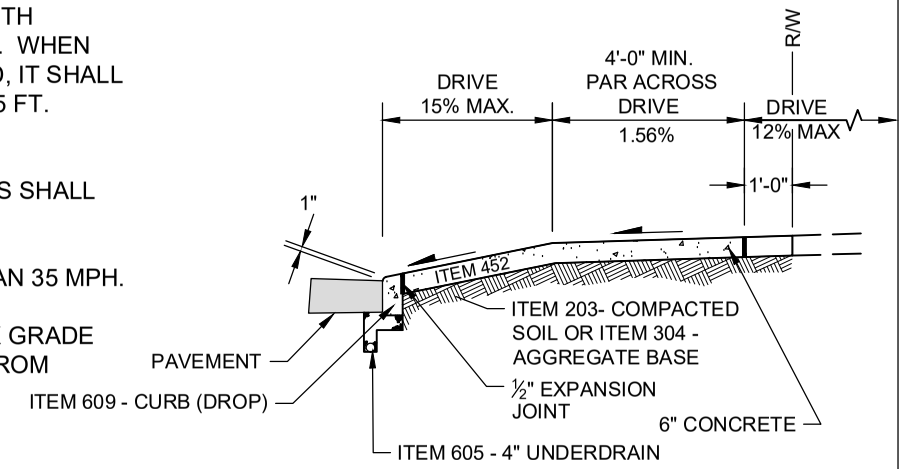

STRAIGHT CURB SECTION
SECTION A-A

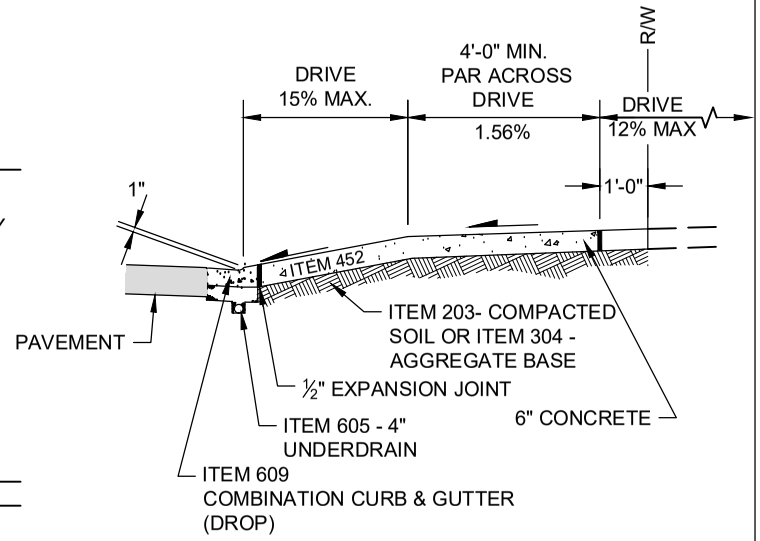

COMBINATION CURB AND GUTTER SECTION
SECTION A-A

DRIVEWAY, RESIDENTIAL CURBED ROADWAY

CITY OF COLUMBUS, OHIO
DEPARTMENT OF PUBLIC SERVICE
DIVISION OF DESIGN AND CONSTRUCTION

CITY ENGINEER

STD DWG
2201

04/30/18

SHT 1 OF 4

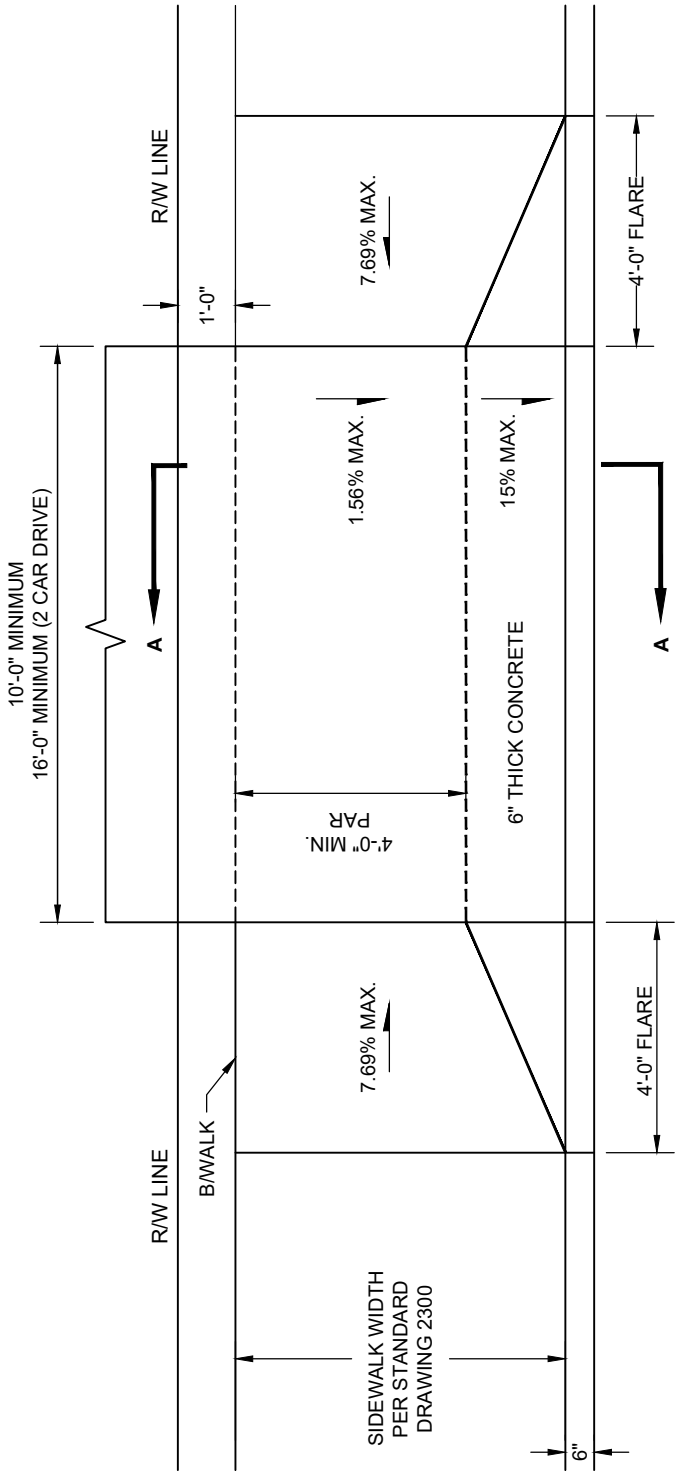

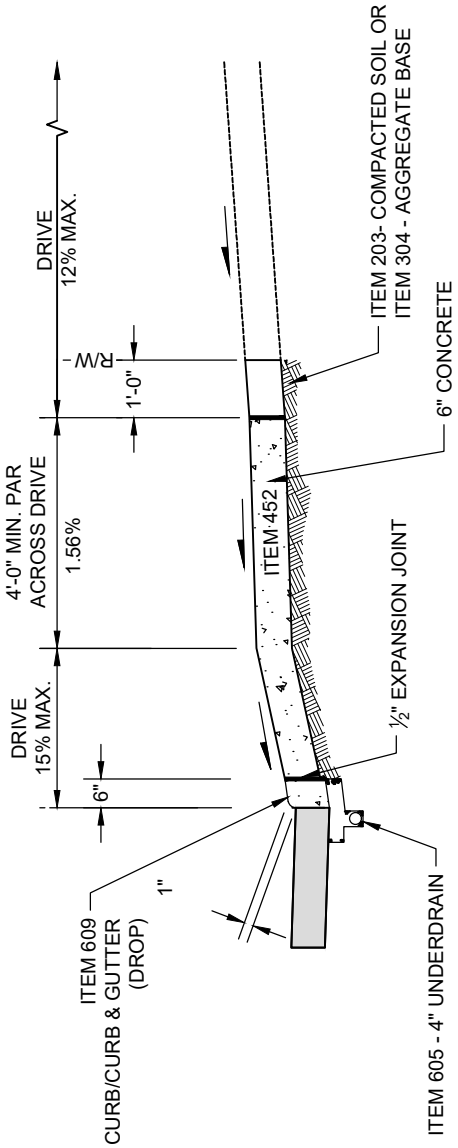

SECTION A-A
SEE SHEET 1 OF 4 FOR NOTES

SIDEWALK ADJACENT TO CURB

DRIVEWAY, RESIDENTIAL CURBED ROADWAY

CITY OF COLUMBUS, OHIO
DEPARTMENT OF PUBLIC SERVICE
DIVISION OF DESIGN AND CONSTRUCTION

STD DWG
2201
04/30/18
SHT 2 OF 4

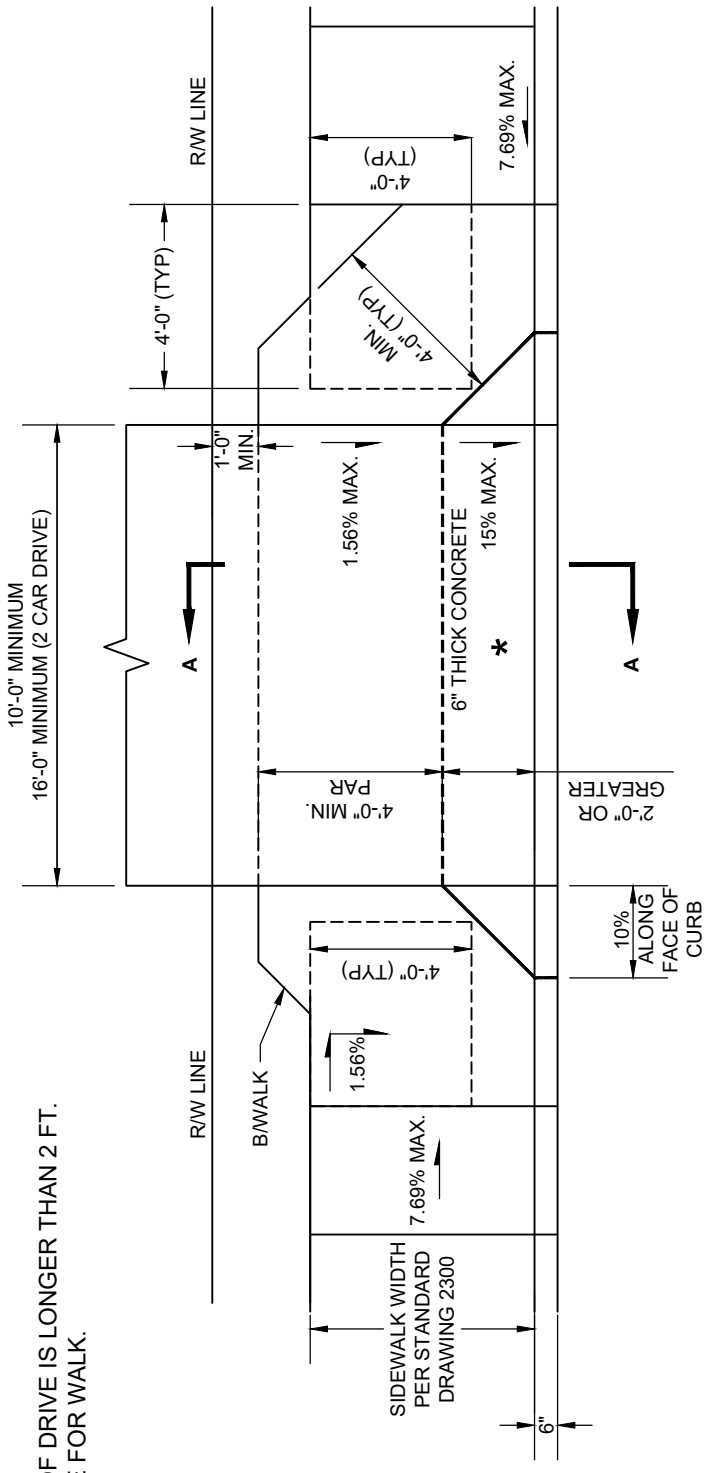

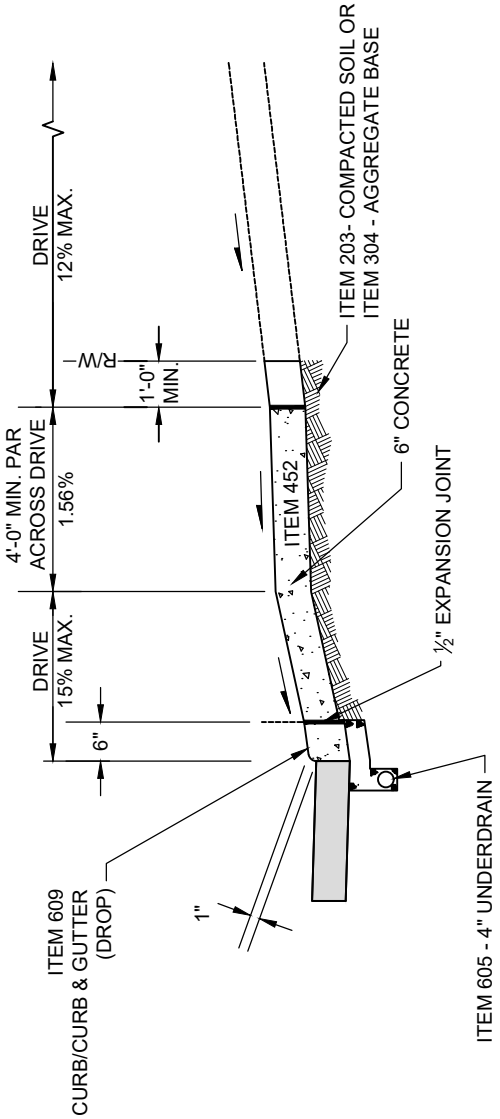

SECTION A-A
SEE SHEET 1 OF 4 FOR NOTES

SIDEWALK ADJACENT TO CURB WITH RUN-AROUND

* USE WHEN FRONT RAMP OF DRIVE IS LONGER THAN 2 FT. MAINTAIN R/W CLEARANCE FOR WALK.

DRIVEWAY, RESIDENTIAL CURBED ROADWAY

CITY OF COLUMBUS, OHIO
DEPARTMENT OF PUBLIC SERVICE
DIVISION OF DESIGN AND CONSTRUCTION

STD DWG
2201
04/30/18
SHT 3 OF 4

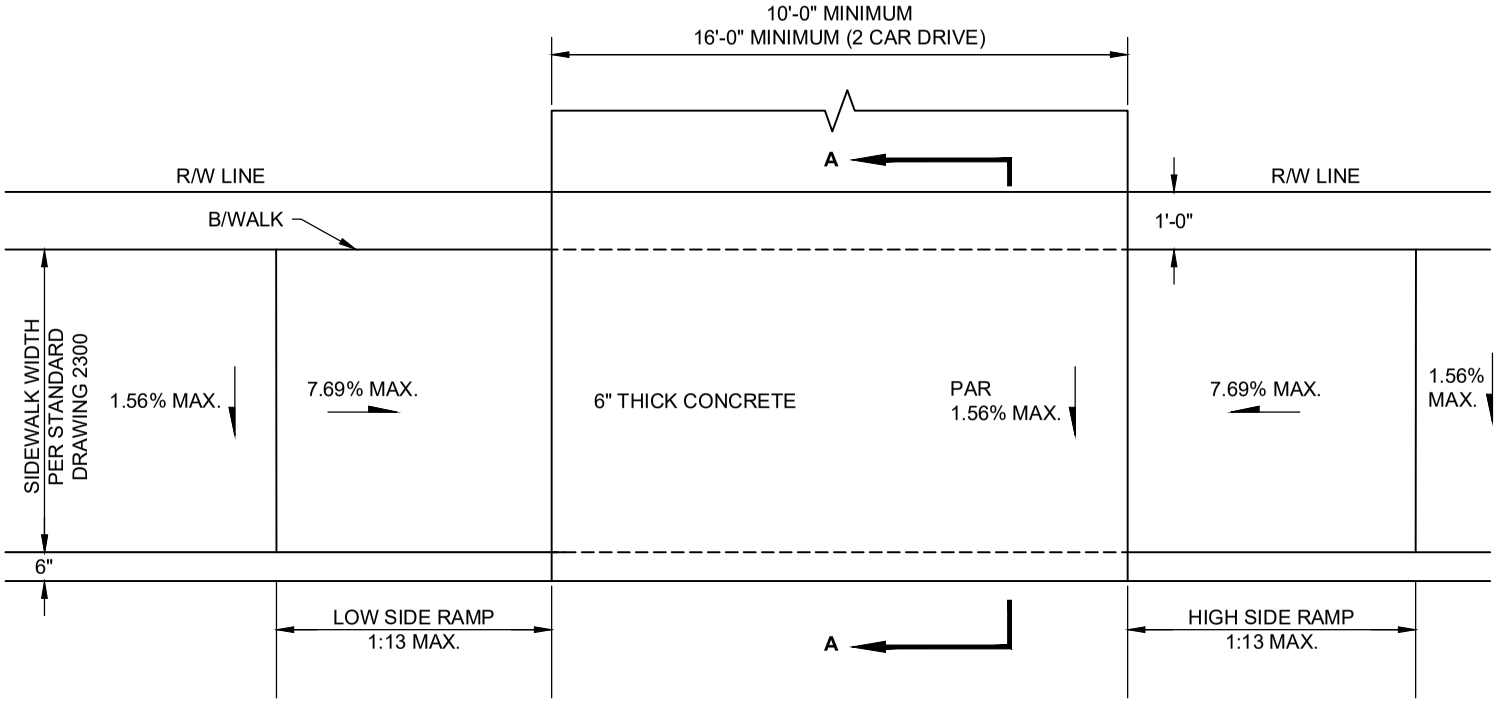

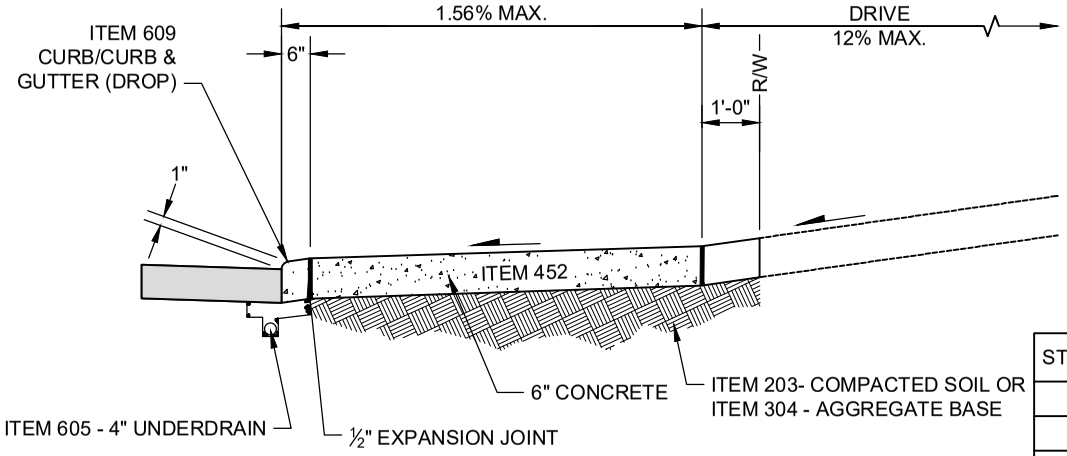

SECTION A-A

SEE SHEET 1 OF 4 FOR NOTES

STREET GRADE	RAMP LENGTH (1:13)	
	LOW SIDE *	HIGH SIDE *
1%	5'-6"	7'-2"
2%	5'-0"	8'-4"
3%	4'-6"	10'-0"
4%	4'-2"	12'-6"
5%	3'-10"	16'-8"

* MEASURED ALONG THE BACK OF CURB

SIDEWALK ADJACENT TO CURB

DRIVEWAY, RESIDENTIAL CURBED ROADWAY

CITY OF COLUMBUS, OHIO
DEPARTMENT OF PUBLIC SERVICE
DIVISION OF DESIGN AND CONSTRUCTION

STD DWG
2201
04/30/18

THIS STANDARD DRAWING IS FOR DRIVES ON LOCAL OR COLLECTOR STREETS WITH SPEEDS ≤ 35 MPH, UNLESS APPROVED OTHERWISE BY DEPARTMENT OF PUBLIC SERVICE.

*CURB OR COMBINED CURB AND GUTTER SHALL BE TAKEN OUT AND REPLACED WITH CONCRETE, SEPARATED FROM THE DRIVE BY 1/2" PREMOLDED EXPANSION JOINT. WHEN LESS THAN 5 FT. OF A CURB SECTION REMAINS AFTER THE CURB CUT IS LOCATED, IT SHALL ALSO BE REMOVED AND REPLACED. CURB SHALL BE CONSTRUCTED IN MINIMUM 5 FT. SECTIONS AND MAXIMUM 10 FT. SECTIONS.

**SIDEWALK WIDTH SHALL BE PER STANDARD DRAWING 2300. SIDEWALK THICKNESS SHALL BE 8" CONCRETE TO ONE FULL PANEL (MIN. 5 FT.) BEYOND THE EDGE OF THE FULL WIDTH SECTION OF THE DRIVE.

PAR = PEDESTRIAN ACCESS ROUTE. SET PAR THROUGH APPROACH AT SIDEWALK GRADE TO AVOID RAMP OR TRANSITION. IF NOT POSSIBLE, THEN MINIMIZE TRANSITION FROM SIDEWALK TO APPROACH.

WHEN CURB OR CURB OR CURB AND GUTTER ARE PRESENT ALL DRIVEWAYS SHALL BE ITEM 452 CONCRETE PAVEMENT

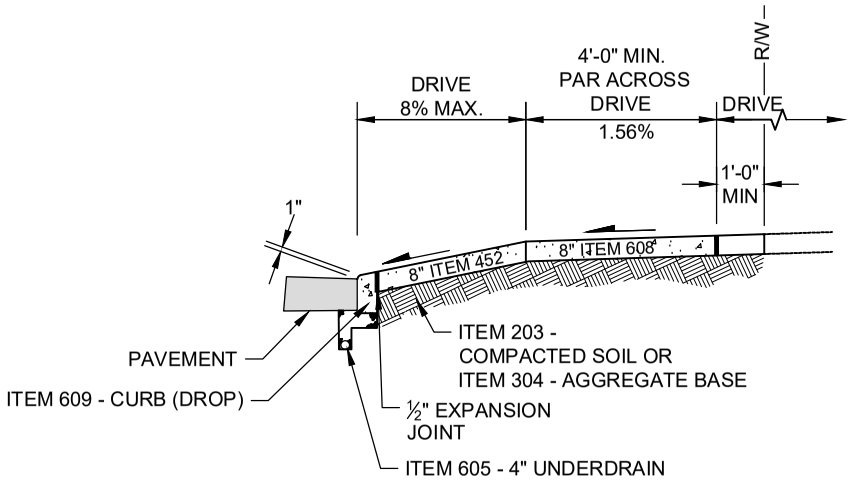

STRAIGHT CURB SECTION
SECTION A-A

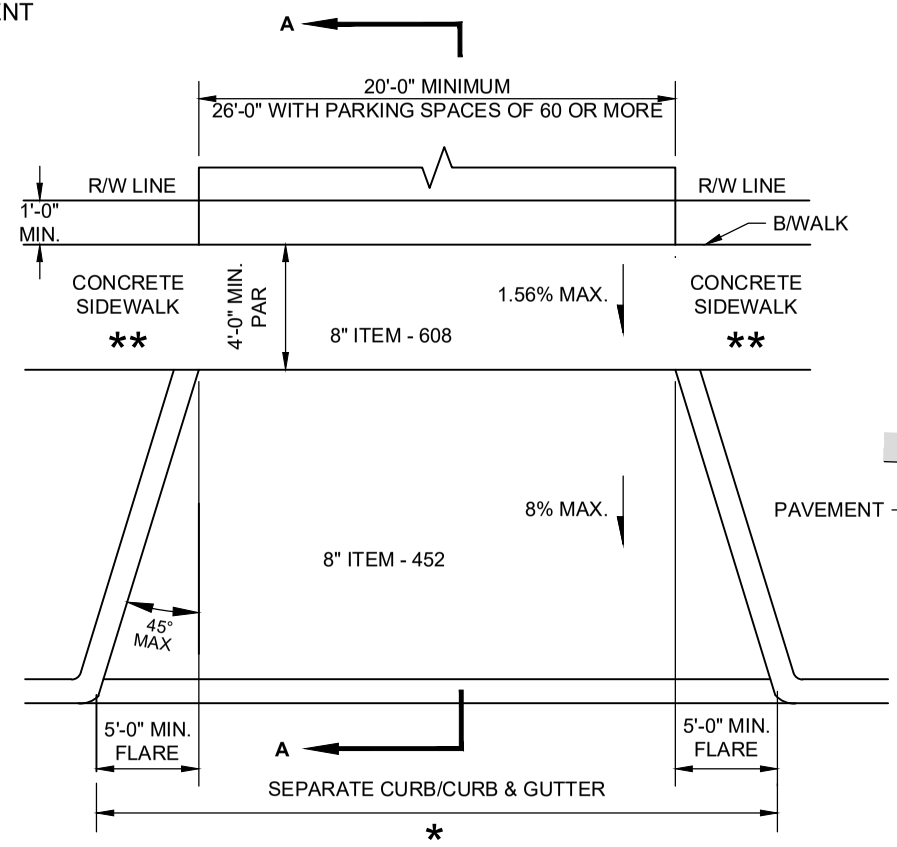

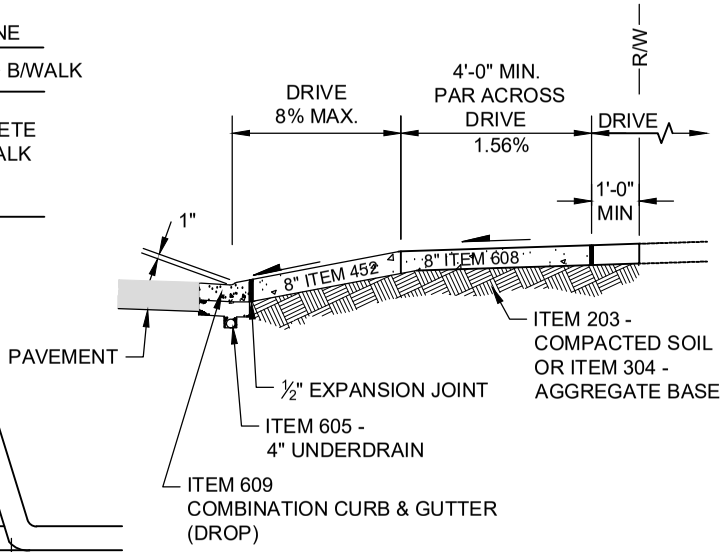

COMBINATION CURB AND GUTTER SECTION
SECTION A-A

CURBED ROADWAY WITH FLARES, TYPE A

DRIVEWAY, NON-RESIDENTIAL

CITY OF COLUMBUS, OHIO
DEPARTMENT OF PUBLIC SERVICE
DIVISION OF DESIGN AND CONSTRUCTION

STD DWG
2202

12/31/18

CITY ENGINEER

SHT 1 OF 14

WHEN CURB OR CURB AND GUTTER ARE PRESENT ALL DRIVEWAYS SHALL BE ITEM 452 CONCRETE PAVEMENT

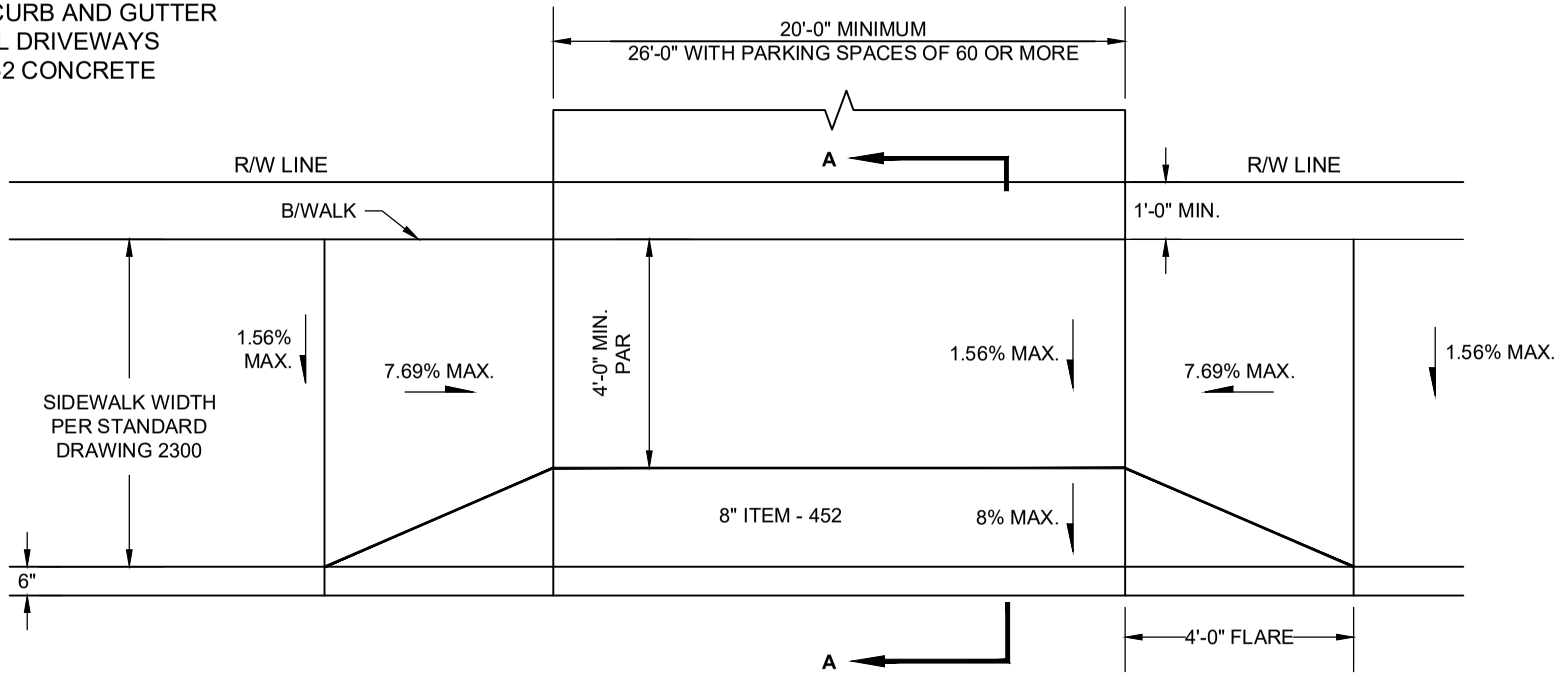

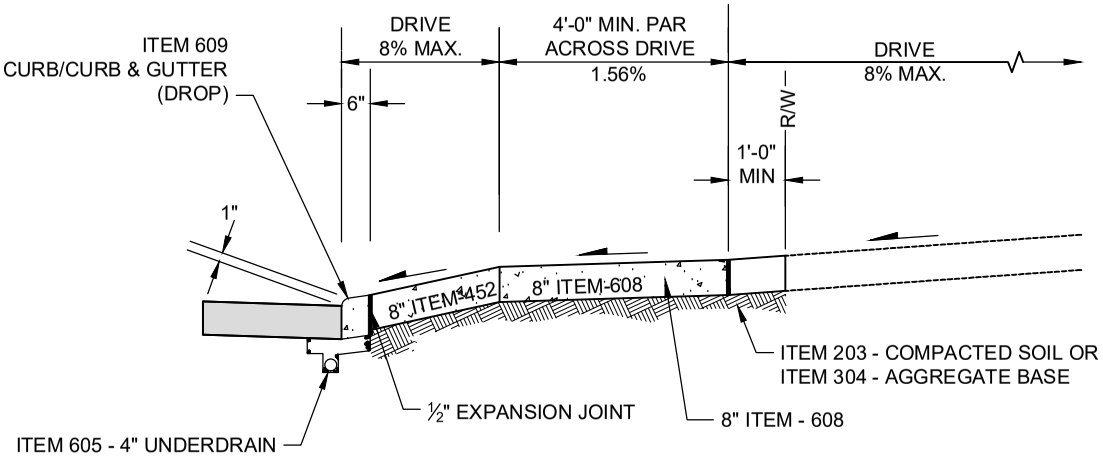

SECTION A-A

SEE SHEET 1 OF 14 FOR NOTES

CURBED ROADWAY WITH FLARES, TYPE B

DRIVEWAY, NON-RESIDENTIAL

CITY OF COLUMBUS, OHIO
DEPARTMENT OF PUBLIC SERVICE
DIVISION OF DESIGN AND CONSTRUCTION

STD DWG
2202
12/31/18

* USE WHEN FRONT RAMP OF DRIVE IS LONGER THAN 2 FT. MAINTAIN R/W CLEARANCE FOR WALK.

WHEN CURB OR CURB OR CURB AND GUTTER ARE PRESENT ALL DRIVEWAYS SHALL BE ITEM 452 CONCRETE PAVEMENT

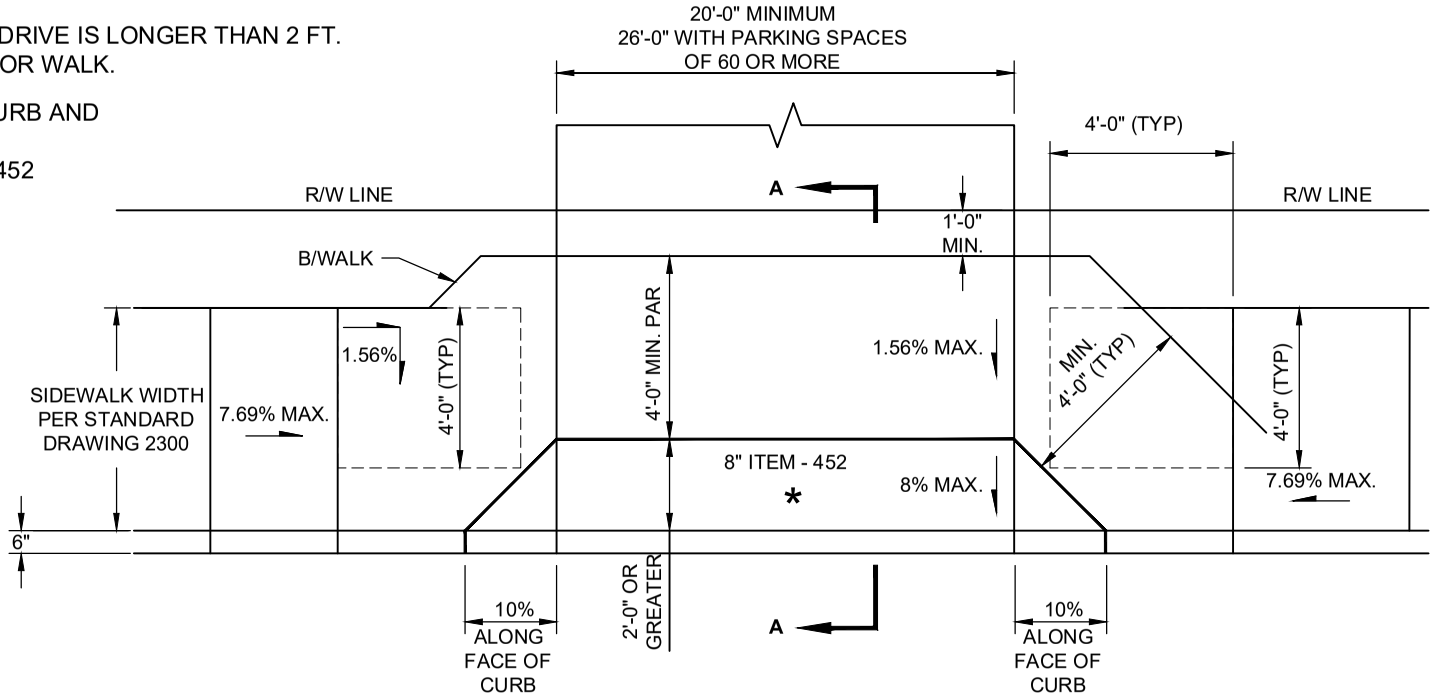

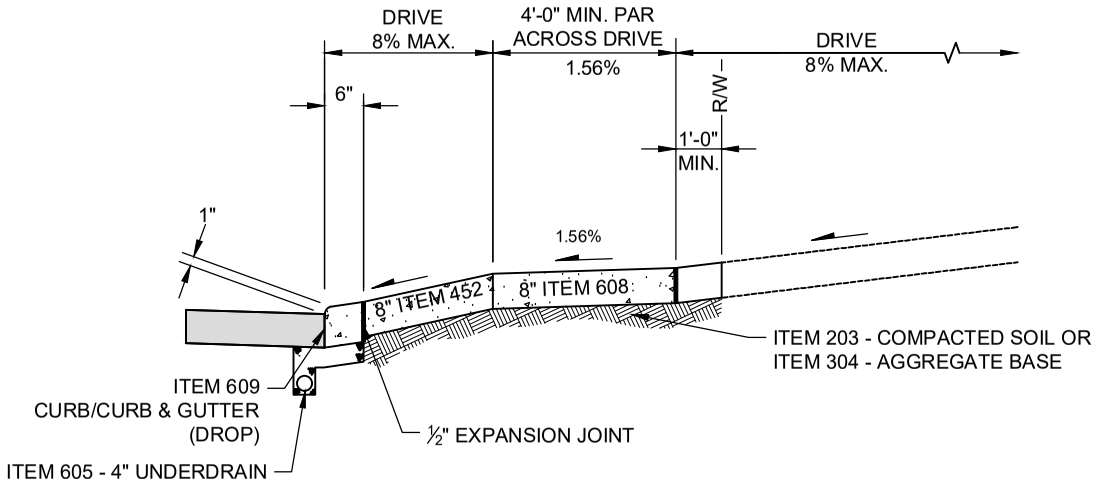

SECTION A-A

SEE SHEET 1 OF 14 FOR NOTES

CURBED ROADWAY WITH FLARES, TYPE C

DRIVEWAY, NON-RESIDENTIAL

CITY OF COLUMBUS, OHIO
DEPARTMENT OF PUBLIC SERVICE
DIVISION OF DESIGN AND CONSTRUCTION

STD DWG
2202
12/31/18

WHEN CURB OR CURB AND GUTTER ARE PRESENT ALL DRIVEWAYS SHALL BE ITEM 452 CONCRETE PAVEMENT

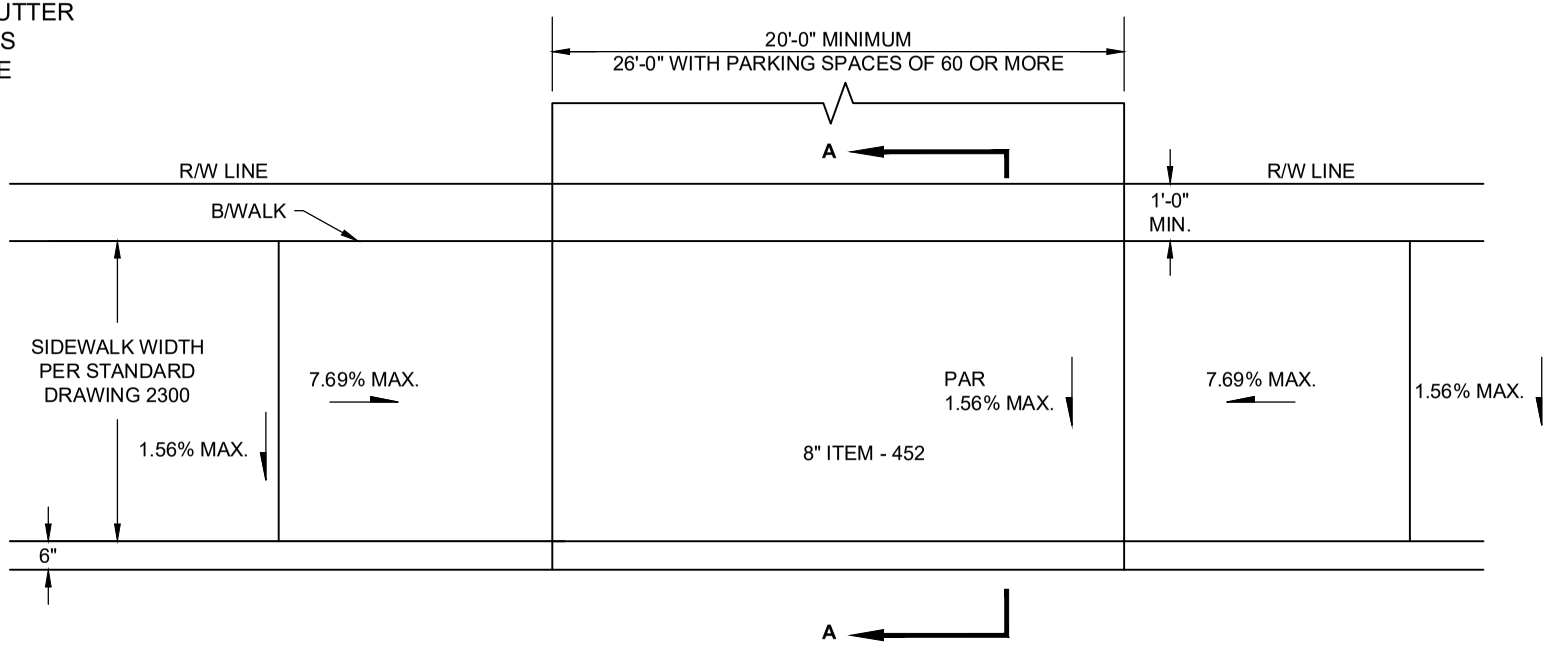

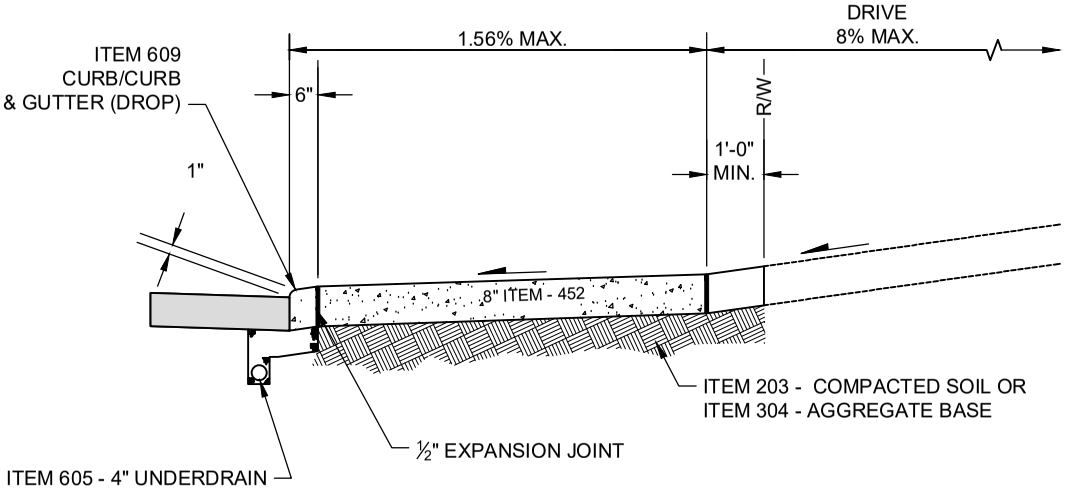

SECTION A-A

SEE SHEET 1 OF 14 FOR NOTES

CURBED ROADWAY WITH FLARES, TYPE D

DRIVEWAY, NON-RESIDENTIAL

CITY OF COLUMBUS, OHIO
DEPARTMENT OF PUBLIC SERVICE
DIVISION OF DESIGN AND CONSTRUCTION

STD DWG
2202
12/31/18

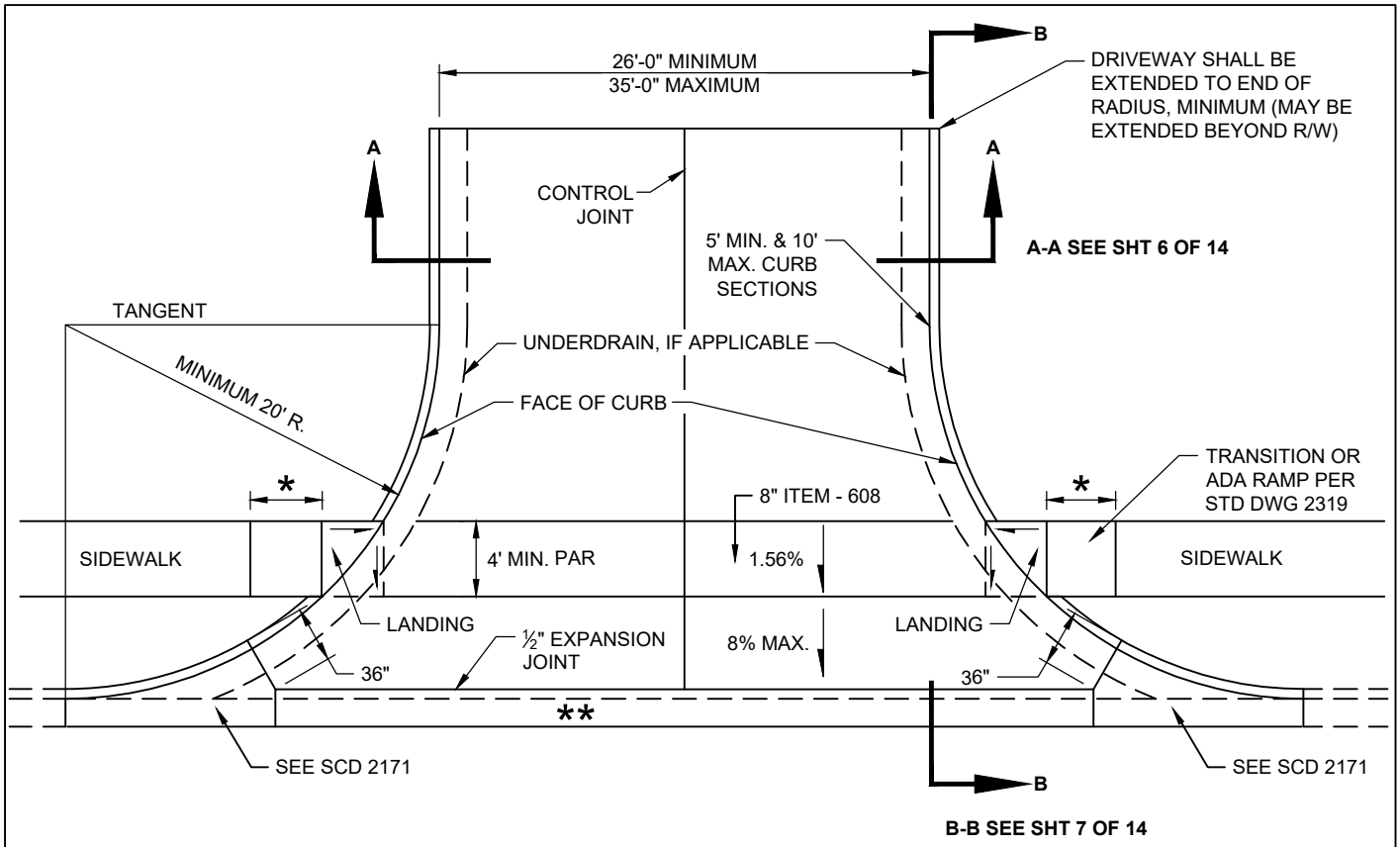

* 8" CONCRETE SIDEWALK FOR 1 FULL PANEL (MIN. 5 FT.) BEYOND EDGE OF DRIVE.

** MAINTAIN 4" PIPE UNDERDRAIN. CURB OR COMBINED CURB AND GUTTER SHALL BE TAKEN OUT AND REPLACED WITH CONCRETE, SEPARATED FROM THE DRIVE BY 1/2" PREMOLDED EXPANSION JOINT. WHEN LESS THAN 5 FT. OF A CURB SECTION REMAINS AFTER THE CURB CUT IS LOCATED, IT SHALL ALSO BE REMOVED AND REPLACED. CURB/GUTTER SHALL BE CONSTRUCTED IN MINIMUM 5 FT. SECTIONS AND MAXIMUM 10 FT. SECTIONS.

PAR = PEDESTRIAN ACCESS ROUTE. SET PAR THROUGH APPROACH AT SIDEWALK GRADE TO AVOID RAMP OR TRANSITION. IF NOT POSSIBLE, THEN MINIMIZE TRANSITION FROM SIDEWALK TO APPROACH.

NO DOWELS REQUIRED ON DRIVES.

WHEN A CURB OR CURB AND GUTTER ARE PRESENT ALL DRIVEWAYS SHALL BE ITEM 452 CONCRETE PAVEMENT

CURBED ROADWAY WITH RADIUS

DRIVEWAY, NON-RESIDENTIAL

CITY OF COLUMBUS, OHIO
DEPARTMENT OF PUBLIC SERVICE
DIVISION OF DESIGN AND CONSTRUCTION

STD DWG
2202
12/31/18
SHT 5 OF 14

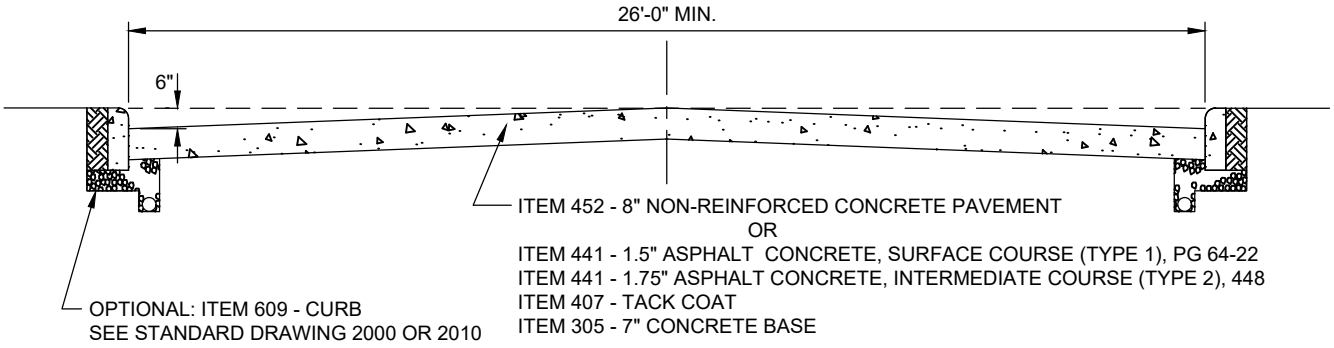

SECTION A-A THROUGH CROWNED PAVEMENT

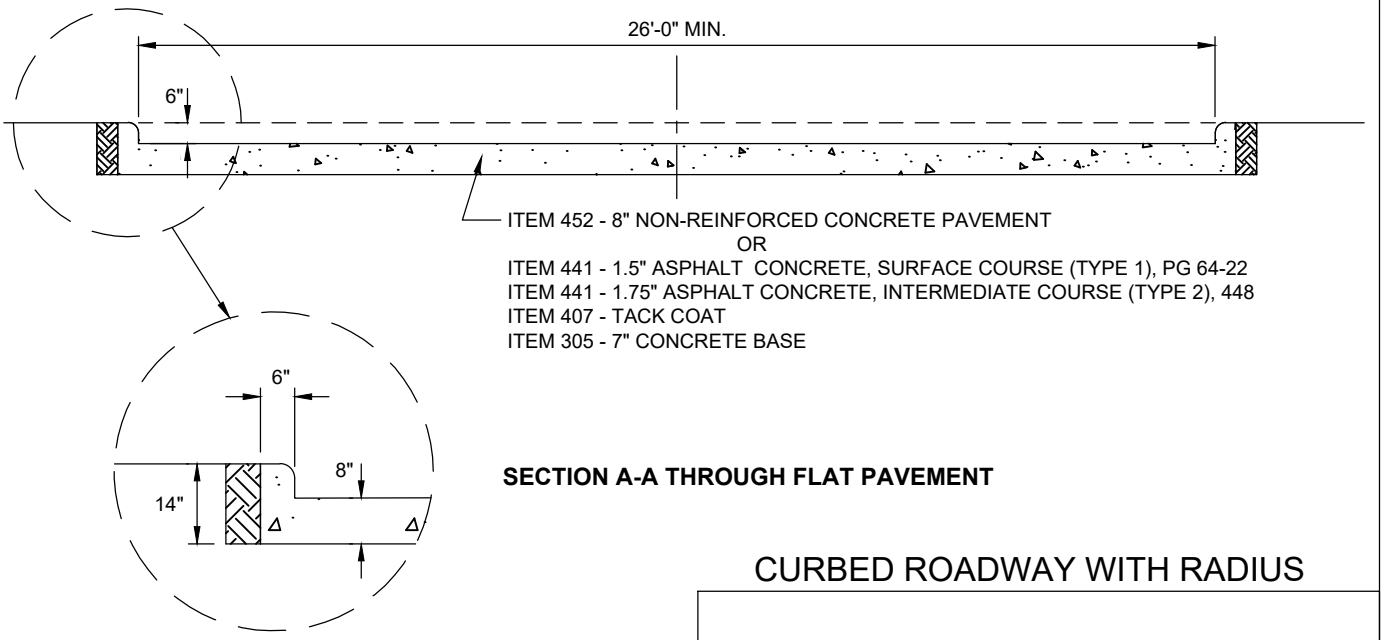

SECTION A-A THROUGH FLAT PAVEMENT

CURBED ROADWAY WITH RADIUS

DRIVEWAY, NON-RESIDENTIAL

CITY OF COLUMBUS, OHIO
DEPARTMENT OF PUBLIC SERVICE
DIVISION OF DESIGN AND CONSTRUCTION

STD DWG
2202

12/31/18

SHT 6 OF 14

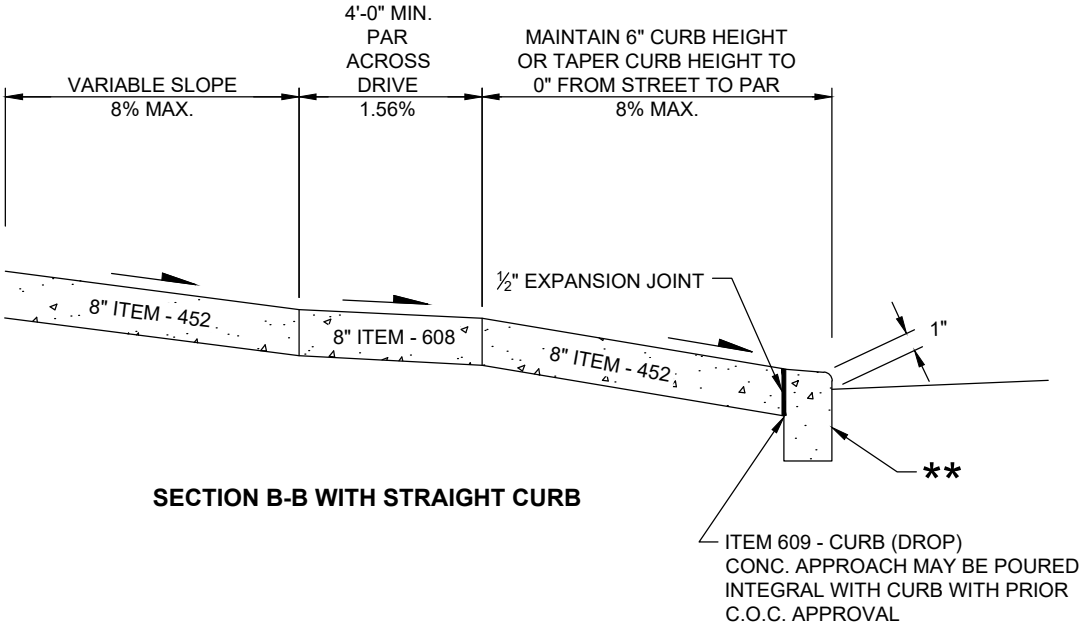

SECTION B-B WITH STRAIGHT CURB

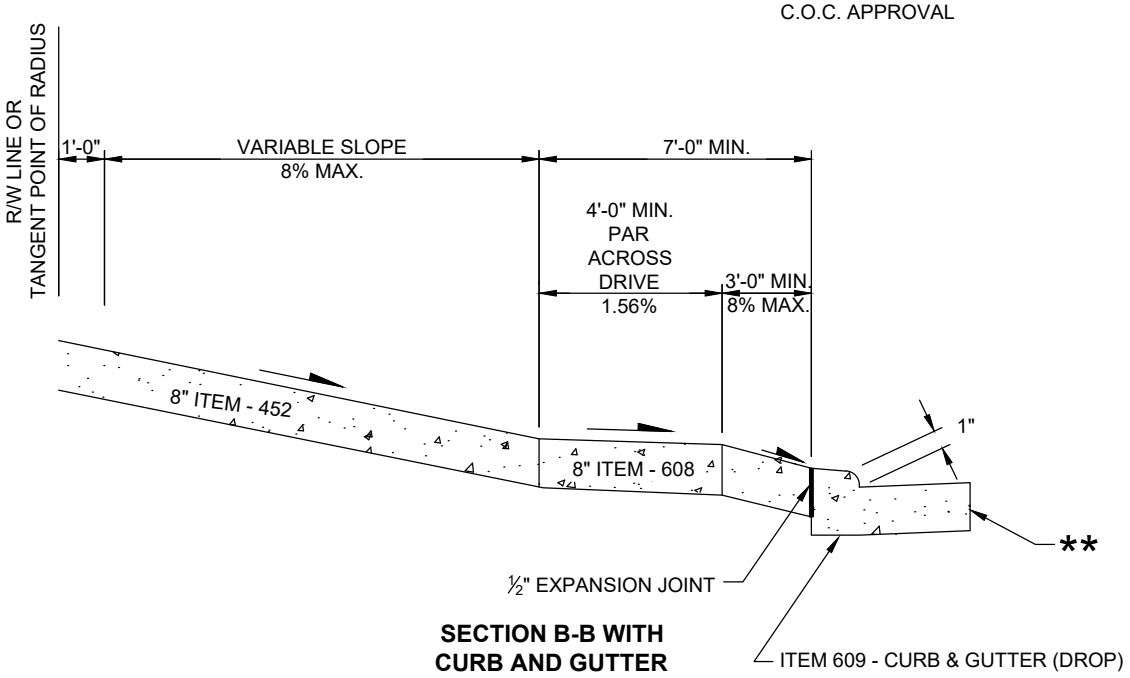

SECTION B-B WITH CURB AND GUTTER

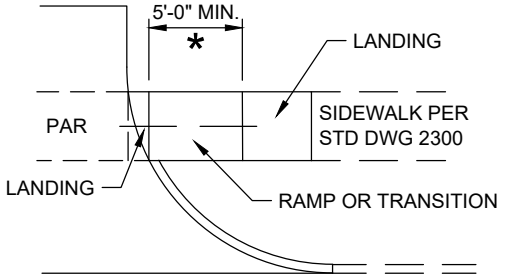

CURBED ROADWAY WITH RADIUS

PAR = PEDESTRIAN ACCESS ROUTE. SET PAR THROUGH APPROACH AT SIDEWALK GRADE TO AVOID RAMP OR TRANSITION. IF NOT POSSIBLE, THEN MINIMIZE TRANSITION FROM SIDEWALK TO APPROACH.

* 8" ITEM - 608

** STRAIGHT CURB OR CONCRETE CURB & GUTTER.

DRIVEWAY, NON-RESIDENTIAL

CITY OF COLUMBUS, OHIO
DEPARTMENT OF PUBLIC SERVICE
DIVISION OF DESIGN AND CONSTRUCTION

STD DWG
2202

12/31/18

FOR USE ON A NON-RESIDENTIAL PARCEL

DRIVE PAVEMENT (TYPE, RIGID)
ITEM 452 - 8" NON-REINFORCED PORTLAND CEMENT CONCRETE

SIDEWALK SHALL BE PER STANDARD DRAWING 2300. SIDEWALK THICKNESS SHALL BE 8" CONCRETE TO ONE FULL PANEL (MIN. 5 FT.) BEYOND THE EDGE OF THE FULL WIDTH SECTION OF THE DRIVE.

* PAR = PEDESTRIAN ACCESS ROUTE. SET PAR THROUGH APPROACH AT SIDEWALK GRADE TO AVOID RAMP OR TRANSITION. IF NOT POSSIBLE, THEN MINIMIZE TRANSITION FROM SIDEWALK TO APPROACH.

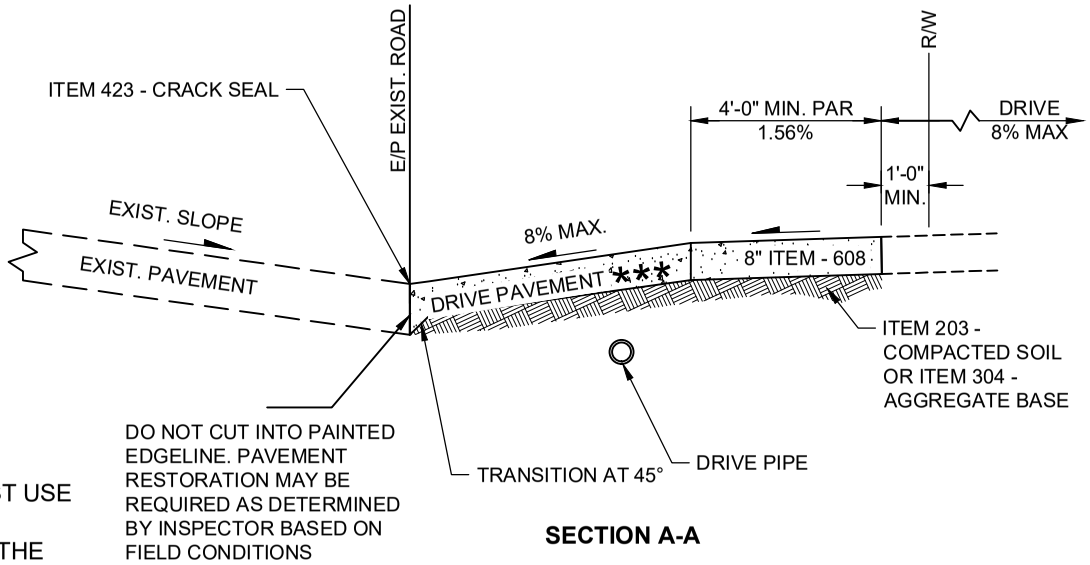

SECTION A-A

WHEN CONDITIONS EXIST USE THE FOLLOWING;
IF THE DISTANCE FROM THE SIDEWALK TO THE EDGE OF PAVEMENT IS:

>5' ----- HOLD THE FLARE TO 45* AND ADJUST THE WIDTH ACCORDINGLY, MAINTAIN THE MINIMUM 2' WIDE PERPENDICULAR AREA OF THE APPROACH

5'-7' --- MAINTAIN THE 5' MAXIMUM FLARE WIDTH, VARY THE ANGLE, AND MAINTAIN THE MINIMUM 2' WIDE PERPENDICULAR AREA OF THE APPROACH

>7' ----- DECREASE THE 45* ANGLE (ADJUST ACCORDINGLY), MAINTAIN THE MINIMUM 2' WIDE PERPENDICULAR AREA OF THE APPROACH

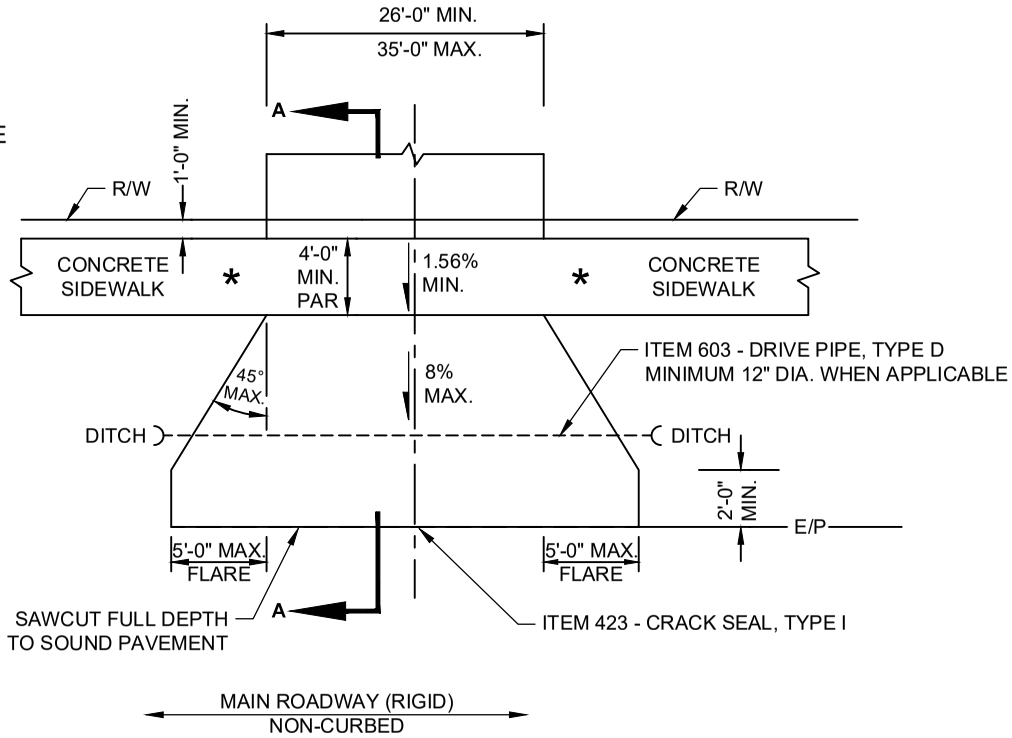

NON-CURBED ROADWAY WITH FLARES
DRIVE PAVEMENT, RIGID

DRIVEWAY, NON- RESIDENTIAL

CITY OF COLUMBUS, OHIO
DEPARTMENT OF PUBLIC SERVICE
DIVISION OF DESIGN AND CONSTRUCTION

STD DWG
2202
12/31/18

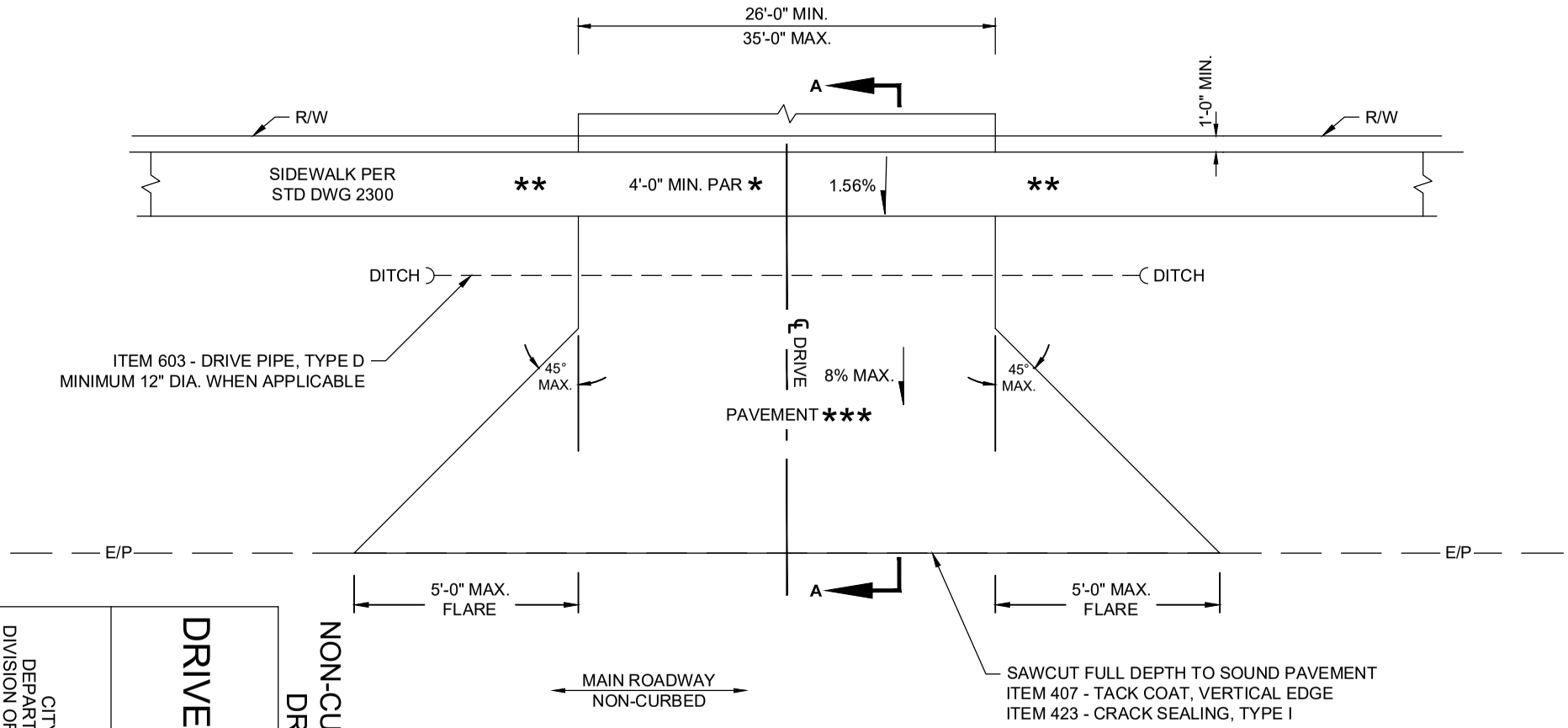

A-A SEE SHT 10 OF 14

* PAR = PEDESTRIAN ACCESS ROUTE. SET PAR THROUGH APPROACH AT SIDEWALK GRADE TO AVOID RAMP OR TRANSITION. IF NOT POSSIBLE, THEN MINIMIZE TRANSITION FROM SIDEWALK TO APPROACH.

** 8" THICK CONCRETE SIDEWALK FOR 1 FULL PANEL (MIN. 5 FT.) BEYOND THE EDGE OF THE FULL WIDTH SECTION OF THE DRIVE.

*** DRIVE PAVEMENT (FLEXIBLE DESIGN)
ITEM 441 - 1.5" ASPHALT CONCRETE, SURFACE COURSE, (TYPE 1), PG 64-22
ITEM 441 - 2" ASPHALT CONCRETE, INTERMEDIATE COURSE, (TYPE 2)
ITEM 301 - 4.5" ASPHALT CONCRETE BASE
ITEM 304 - 4" AGGREGATE BASE

NON-CURBED ROADWAY WITH FLARES
DRIVE PAVEMENT, FLEXIBLE

DRIVEWAY, NON-RESIDENTIAL

CITY OF COLUMBUS, OHIO
DEPARTMENT OF PUBLIC SERVICE
DIVISION OF DESIGN AND CONSTRUCTION

STD DWG
2202
12/31/18

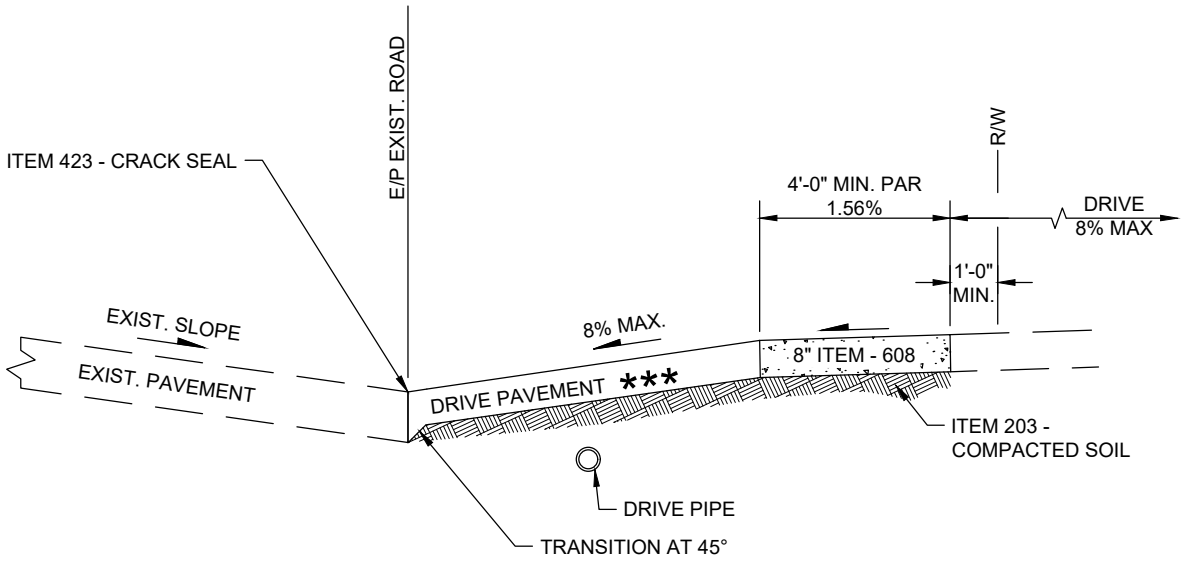

SECTION A-A

NON-CURBED ROADWAY WITH FLARES
DRIVE PAVEMENT, FLEXIBLE

DRIVEWAY, NON-RESIDENTIAL

CITY OF COLUMBUS, OHIO
DEPARTMENT OF PUBLIC SERVICE
DIVISION OF DESIGN AND CONSTRUCTION

STD DWG
2202

12/31/18

SHT 10 OF 14

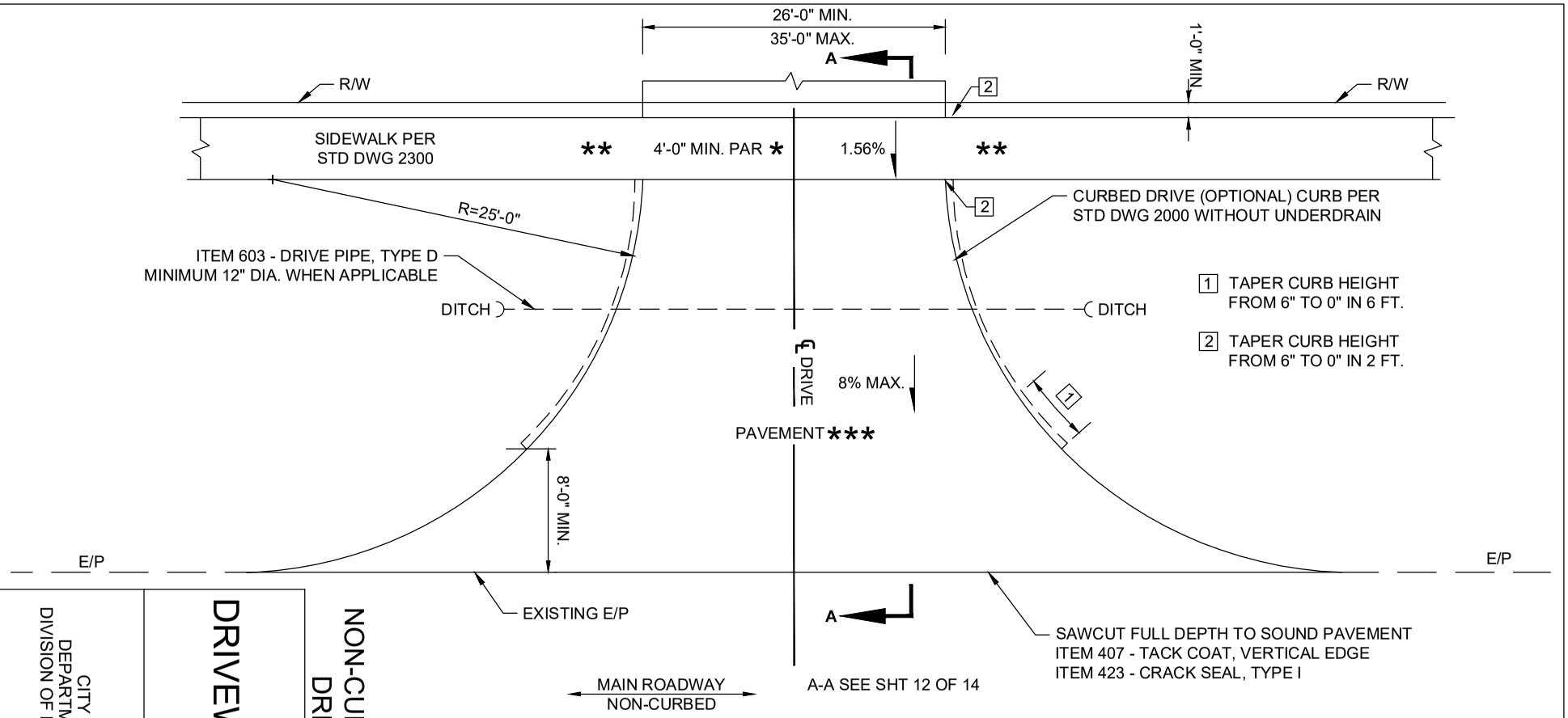

NON-CURBED ROADWAY WITH RADIUS
DRIVE PAVEMENT, FLEXIBLE

* PAR = PEDESTRIAN ACCESS ROUTE. SET PAR THROUGH APPROACH AT SIDEWALK GRADE TO AVOID RAMP OR TRANSITION. IF NOT POSSIBLE, THEN MINIMIZE TRANSITION FROM SIDEWALK TO APPROACH.

** 8" THICK CONCRETE SIDEWALK FOR 1 FULL PANEL (MIN. 5 FT.) BEYOND THE EDGE OF THE FULL WIDTH SECTION OF THE DRIVE.

*** <u>DRIVE PAVEMENT (FLEXIBLE DESIGN)</u>
ITEM 441 - 1.5" ASPHALT CONCRETE, SURFACE COURSE, (TYPE 1), PG 64-22
ITEM 441 - 2" ASPHALT CONCRETE, INTERMEDIATE COURSE (TYPE 2)
ITEM 301 - 4.5" ASPHALT CONCRETE BASE
ITEM 304 - 4" AGGREGATE BASE

DRIVEWAY, NON-RESIDENTIAL

CITY OF COLUMBUS, OHIO
DEPARTMENT OF PUBLIC SERVICE
DIVISION OF DESIGN AND CONSTRUCTION

STD DWG
2202
12/31/18

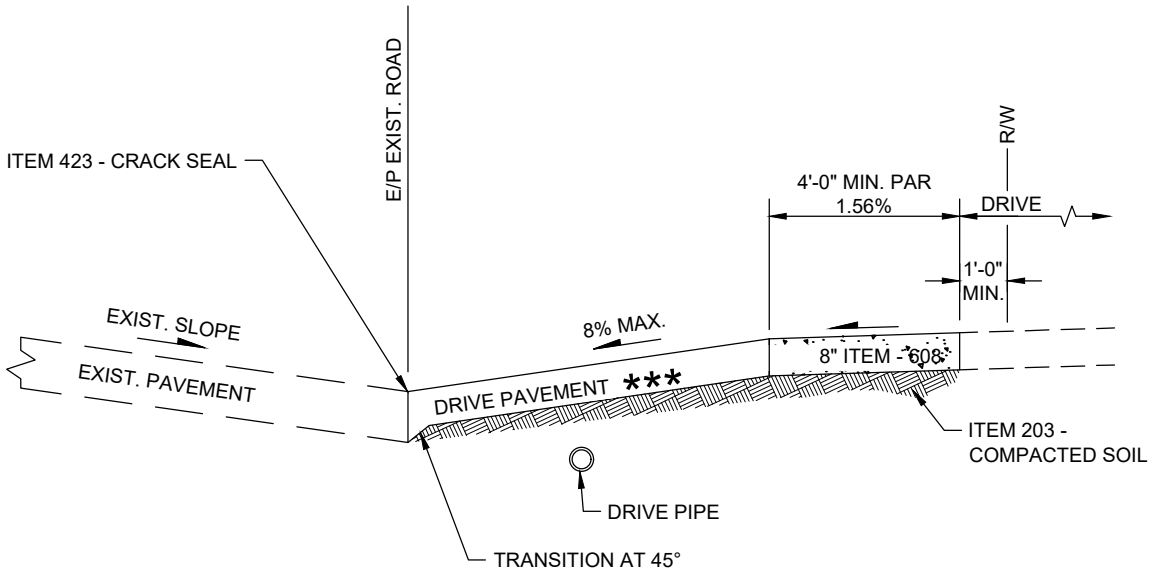

SECTION A-A

NON-CURBED ROADWAY WITH RADIUS,
DRIVE PAVEMENT, FLEXIBLE

DRIVEWAY, NON-RESIDENTIAL

CITY OF COLUMBUS, OHIO
DEPARTMENT OF PUBLIC SERVICE
DIVISION OF DESIGN AND CONSTRUCTION

STD DWG
2202

12/31/18

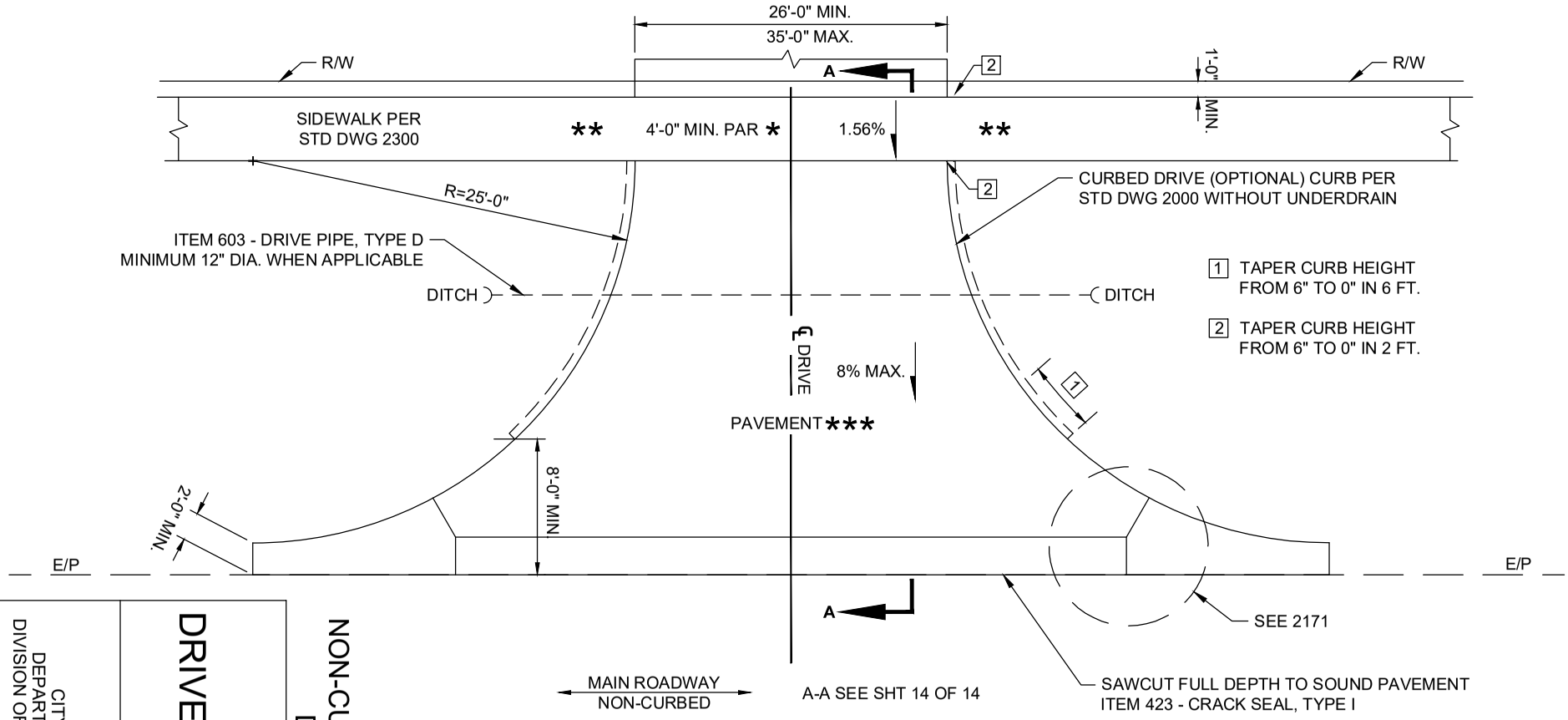

* PAR = PEDESTRIAN ACCESS ROUTE. SET PAR THROUGH APPROACH AT SIDEWALK GRADE TO AVOID RAMP OR TRANSITION. IF NOT POSSIBLE, THEN MINIMIZE TRANSITION FROM SIDEWALK TO APPROACH.

** 8" THICK CONCRETE SIDEWALK FOR 1 FULL PANEL (MIN. 5 FT.) BEYOND THE EDGE OF THE FULL WIDTH SECTION OF THE DRIVE.

*** DRIVE PAVEMENT (RIGID DESIGN)
ITEM 452 - 8" NON-REINFORCED PORTLAND CEMENT CONCRETE.

NON-CURBED ROADWAY WITH RADIUS
DRIVE PAVEMENT, RIGID

DRIVEWAY, NON-RESIDENTIAL

CITY OF COLUMBUS, OHIO
DEPARTMENT OF PUBLIC SERVICE
DIVISION OF DESIGN AND CONSTRUCTION

STD DWG
2202
12/31/18

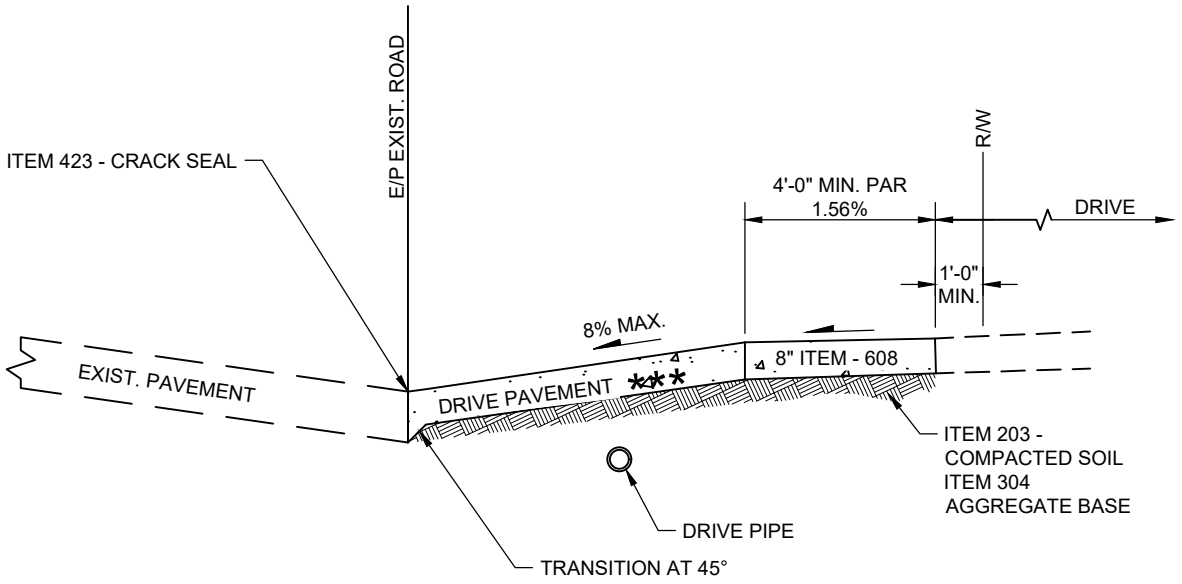

SECTION A-A

NON-CURBED ROADWAY WITH RADIUS
DRIVE PAVEMENT, RIGID

DRIVEWAY, NON-RESIDENTIAL

CITY OF COLUMBUS, OHIO
DEPARTMENT OF PUBLIC SERVICE
DIVISION OF DESIGN AND CONSTRUCTION

STD DWG
2202

12/31/18

SHT 14 OF 14

THIS STANDARD DRAWING IS FOR DRIVES ON LOCAL OR COLLECTOR STREETS WITH SPEEDS ≤ 35 MPH, UNLESS APPROVED OTHERWISE BY DEPARTMENT OF PUBLIC SERVICE.

* CURB OR COMBINED CURB AND GUTTER SHALL BE TAKEN OUT AND REPLACED WITH CONCRETE, SEPARATED FROM THE DRIVE BY 1/2" PREMOLDED EXPANSION JOINT. WHEN LESS THAN 5 FT. OF A CURB SECTION REMAINS AFTER THE CURB CUT IS LOCATED, IT SHALL ALSO BE REMOVED AND REPLACED. CURB SHALL BE CONSTRUCTED IN MINIMUM 5 FT. SECTIONS AND MAXIMUM 10 FT. SECTIONS.

** SIDEWALK WIDTH SHALL BE PER STANDARD DRAWING 2300. SIDEWALK THICKNESS SHALL BE 8" CONCRETE TO ONE FULL PANEL (MIN. 5 FT.) BEYOND EDGE OF DRIVE.

PAR = PEDESTRIAN ACCESS ROUTE. SET PAR THROUGH APPROACH AT SIDEWALK GRADE TO AVOID RAMP OR TRANSITION. IF NOT POSSIBLE, THEN MINIMIZE TRANSITION FROM SIDEWALK TO APPROACH.

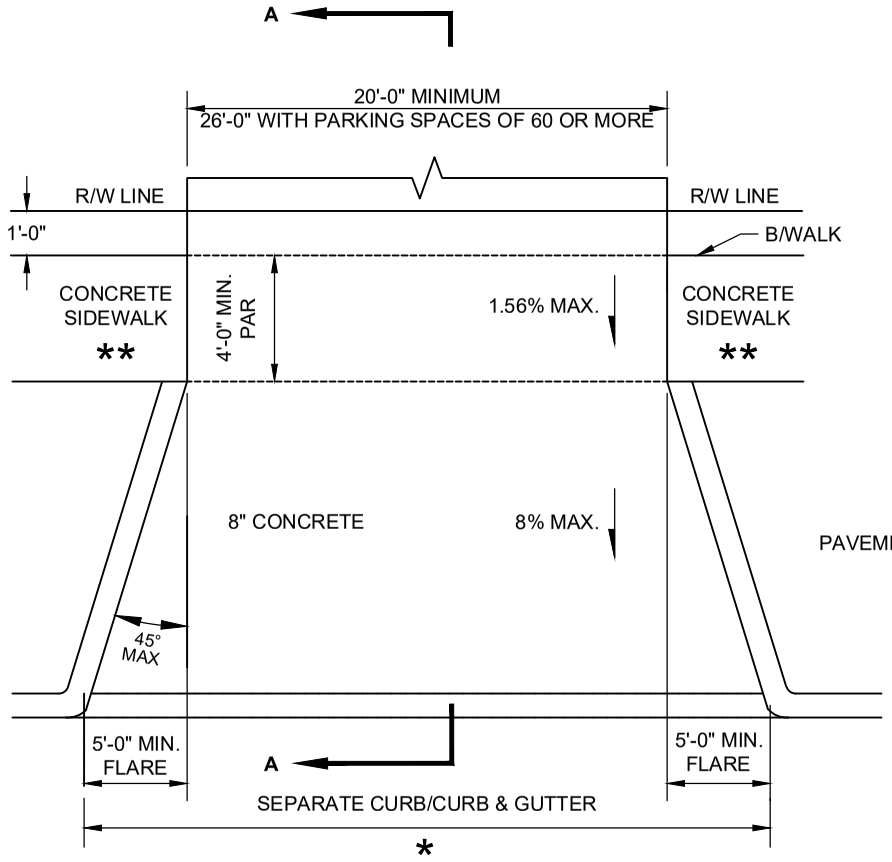

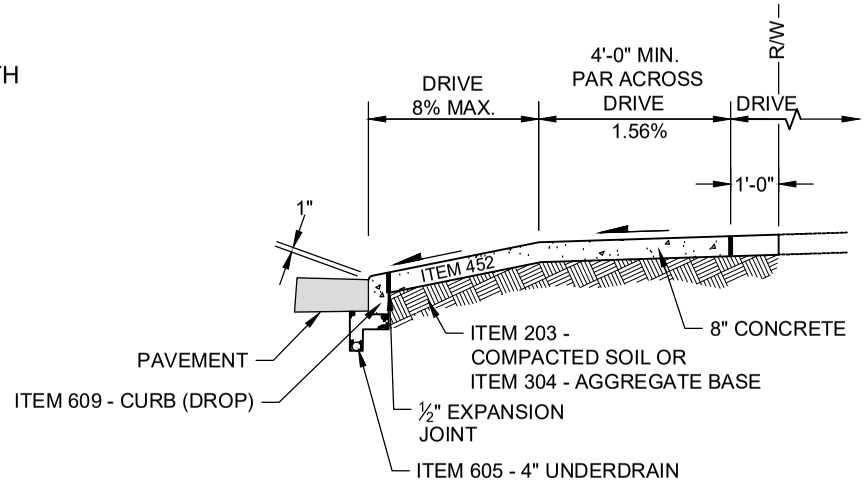

STRAIGHT CURB SECTION
SECTION A-A

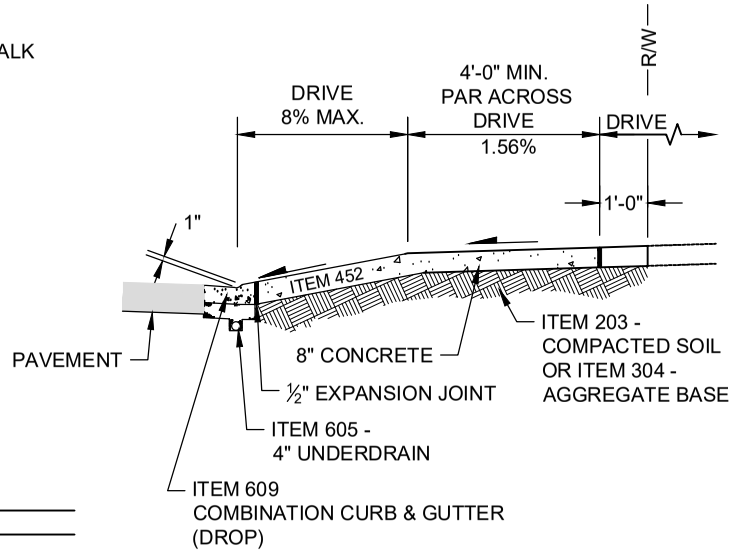

COMBINATION CURB AND GUTTER SECTION
SECTION A-A

DRIVEWAY, NON-RESIDENTIAL WITH FLARES CURBED ROADWAY

CITY OF COLUMBUS, OHIO
DEPARTMENT OF PUBLIC SERVICE
DIVISION OF DESIGN AND CONSTRUCTION

CITY ENGINEER

STD DWG
2202

04/30/18

SHT 1 OF 4

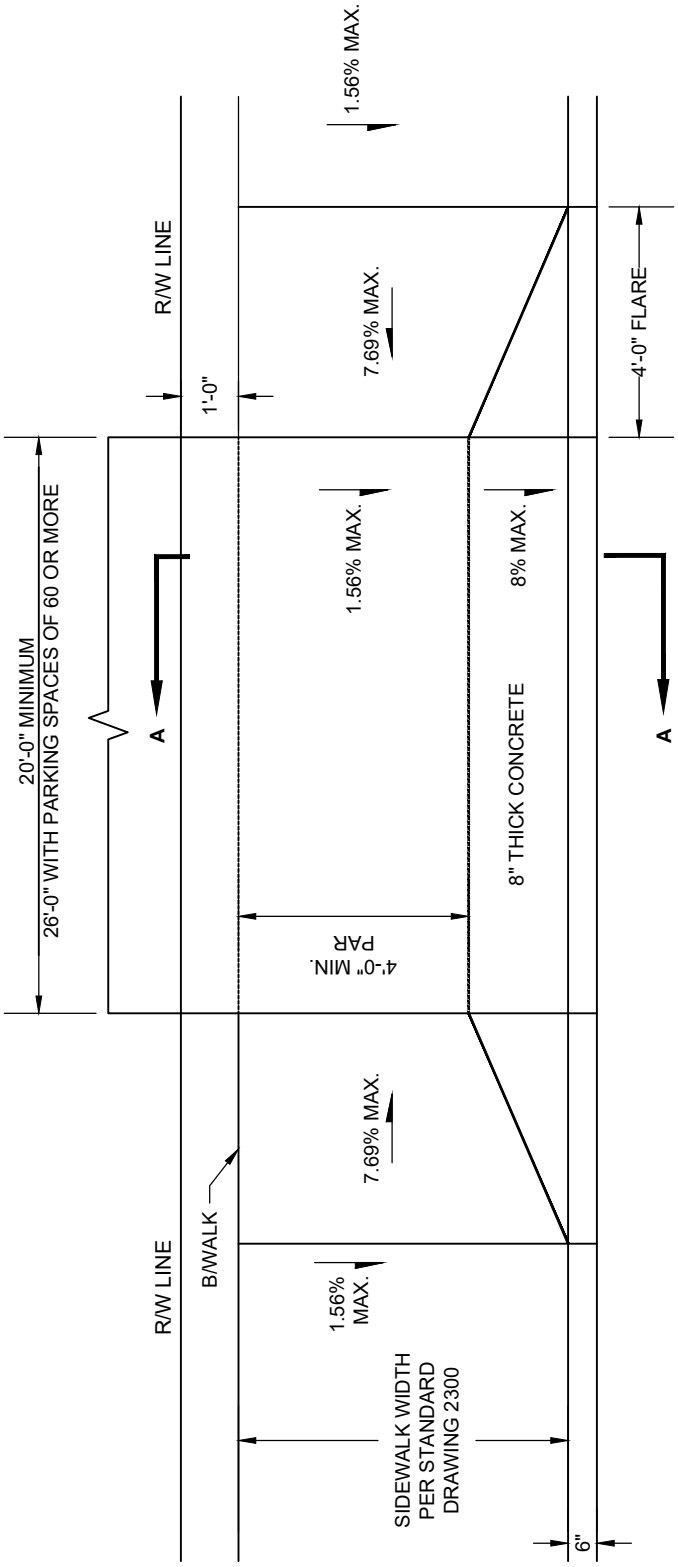

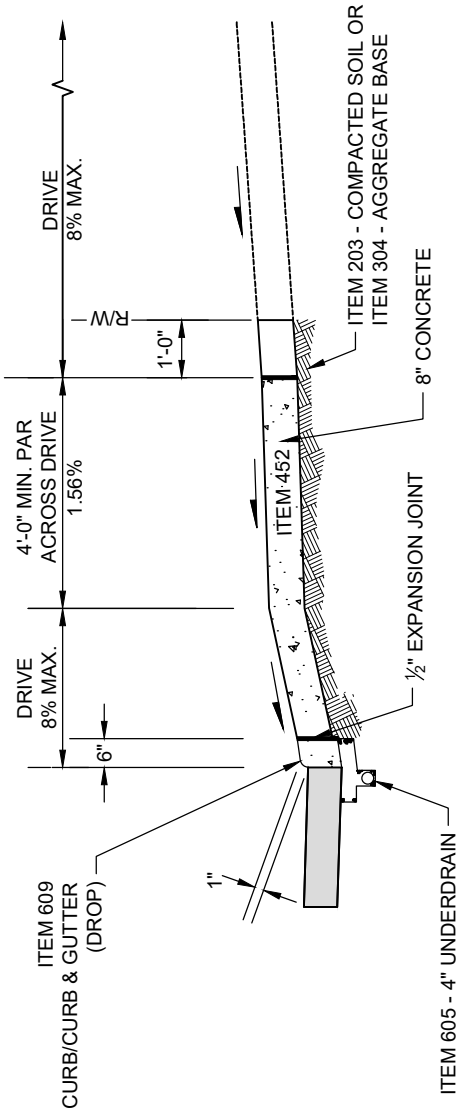

SECTION A-A
SEE SHEET 1 OF 4 FOR NOTES

SIDEWALK ADJACENT TO CURB

DRIVEWAY, NON-RESIDENTIAL WITH FLARES CURBED ROADWAY

CITY OF COLUMBUS, OHIO
DEPARTMENT OF PUBLIC SERVICE
DIVISION OF DESIGN AND CONSTRUCTION

STD DWG
2202

04/30/18

SHT 2 OF 4

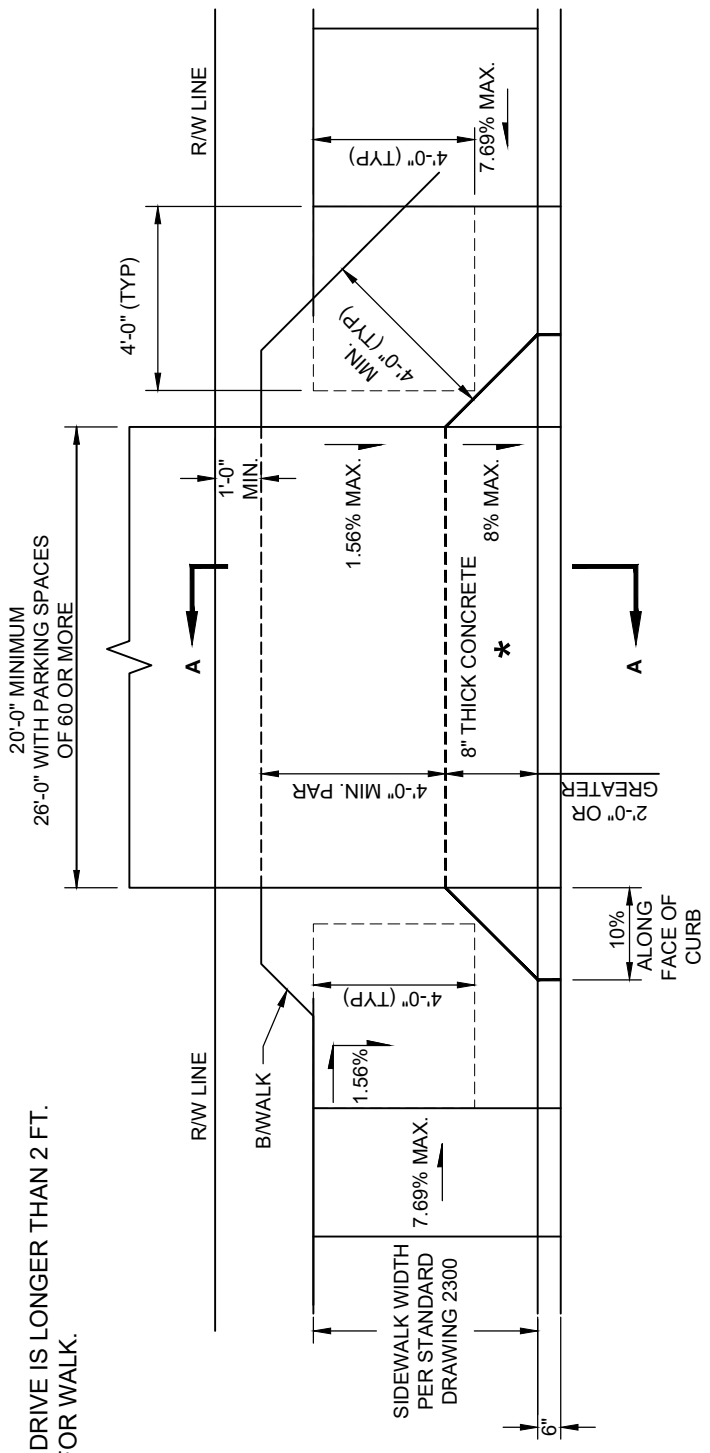

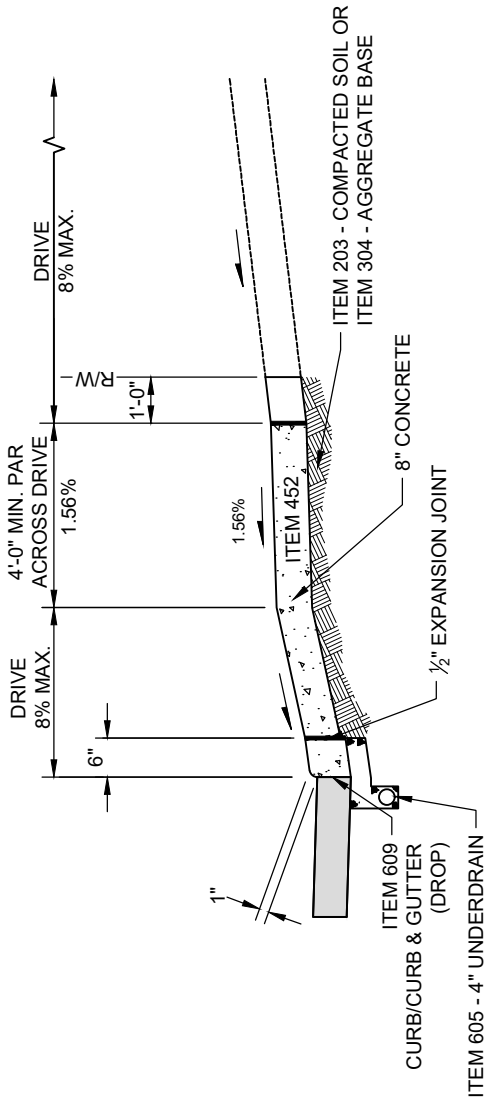

SECTION A-A
SEE SHEET 1 OF 4 FOR NOTES

* USE WHEN FRONT RAMP OF DRIVE IS LONGER THAN 2 FT.
MAINTAIN R/W CLEARANCE FOR WALK.

SIDEWALK ADJACENT TO
CURB WITH RUN-AROUND

DRIVEWAY, NON-RESIDENTIAL WITH FLARES CURBED ROADWAY

CITY OF COLUMBUS, OHIO
DEPARTMENT OF PUBLIC SERVICE
DIVISION OF DESIGN AND CONSTRUCTION

STD DWG
2202
04/30/18
SHT 3 OF 4

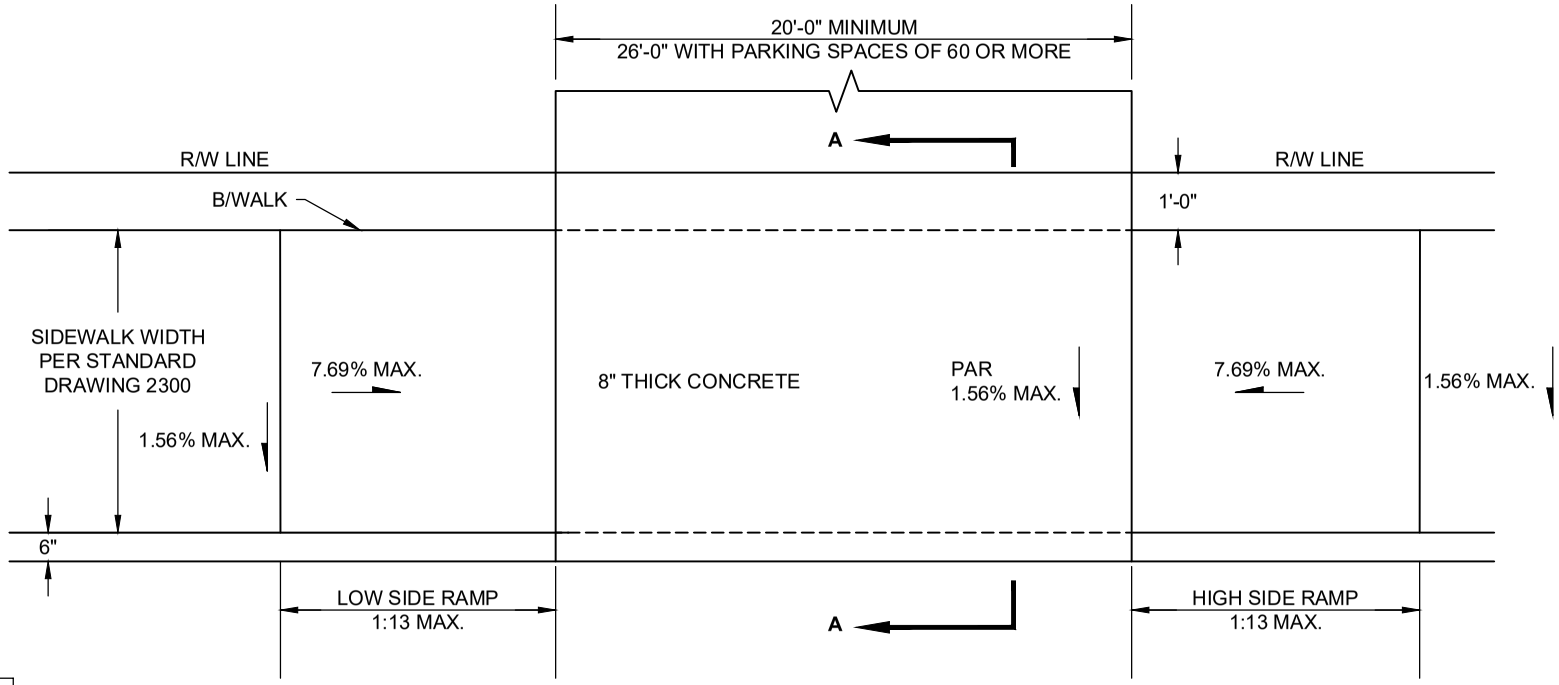

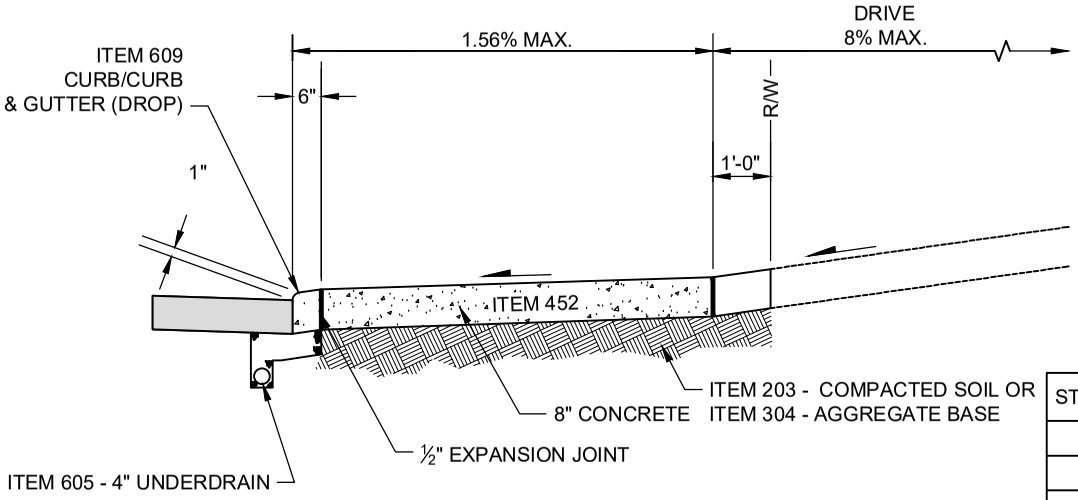

SECTION A-A
SEE SHEET 1 OF 4 FOR NOTES

STREET GRADE	RAMP LENGTH (1:13)	
	LOW SIDE *	HIGH SIDE *
1%	5'-6"	7'-2"
2%	5'-0"	8'-4"
3%	4'-6"	10'-0"
4%	4'-2"	12'-6"
5%	3'-10"	16'-8"

* MEASURED ALONG THE BACK OF CURB

SIDEWALK ADJACENT TO CURB

DRIVEWAY, NON-RESIDENTIAL WITH FLARES CURBED ROADWAY

CITY OF COLUMBUS, OHIO
DEPARTMENT OF PUBLIC SERVICE
DIVISION OF DESIGN AND CONSTRUCTION

STD DWG
2202
04/30/18
SHT 4 OF 4

FOR USE ON A PARCEL WITH A SINGLE DWELLING

* REPLACEMENT OF EXISTING DRIVES SHALL MATCH PAVEMENT (TYPE, DESIGN) IN KIND TO EXISTING DRIVE. NEW DRIVES SHALL BE PAVEMENT (TYPE, DESIGN) SIMILAR TO MAIN ROADWAY (TYPE, DESIGN).

DRIVE PAVEMENT (TYPE, FLEXIBLE)

ITEM 441 - 1.5" ASPHALT CONCRETE, SURFACE COURSE, (TYPE 1), PG 64-22

ITEM 441 - 2.5" ASPHALT CONCRETE, INTERMEDIATE COURSE, (TYPE 2), PG 64-22

ITEM 304 - 4" AGGREGATE BASE

** SIDEWALK SHALL BE PER STANDARD DRAWING 2300. SIDEWALK THICKNESS SHALL BE 6" CONCRETE TO ONE FULL PANEL (MIN. 5 FT.) BEYOND EDGE OF DRIVE.

PAR = PEDESTRIAN ACCESS ROUTE. SET PAR THROUGH APPROACH AT SIDEWALK GRADE TO AVOID RAMP OR TRANSITION. IF NOT POSSIBLE, THEN MINIMIZE TRANSITION FROM SIDEWALK TO APPROACH.

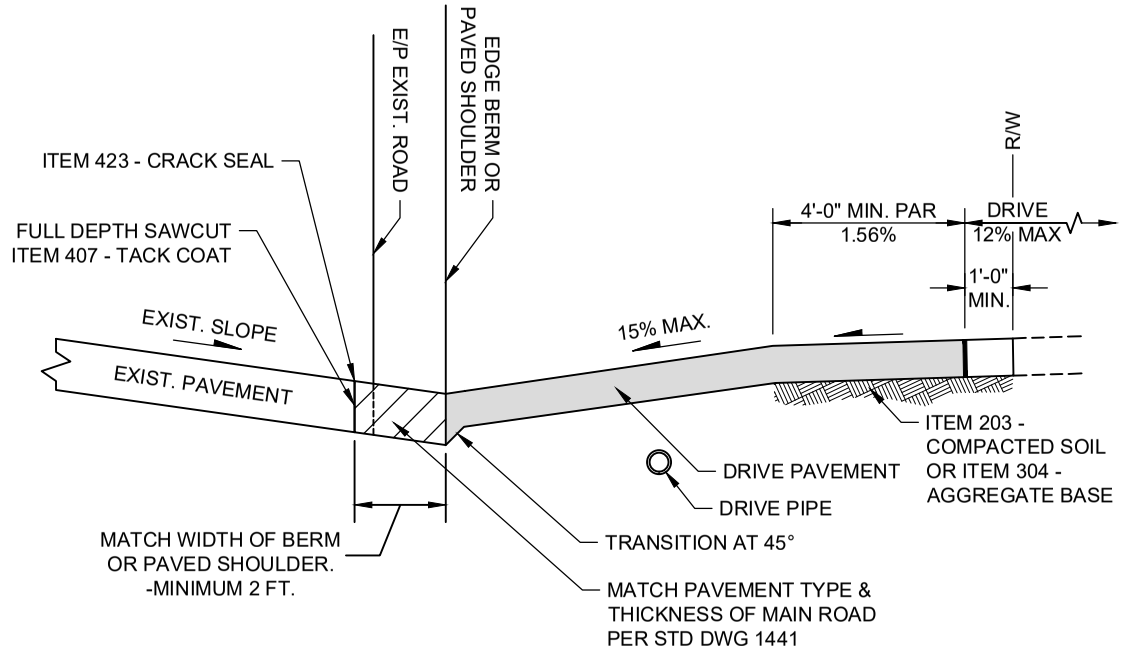

SECTION A-A

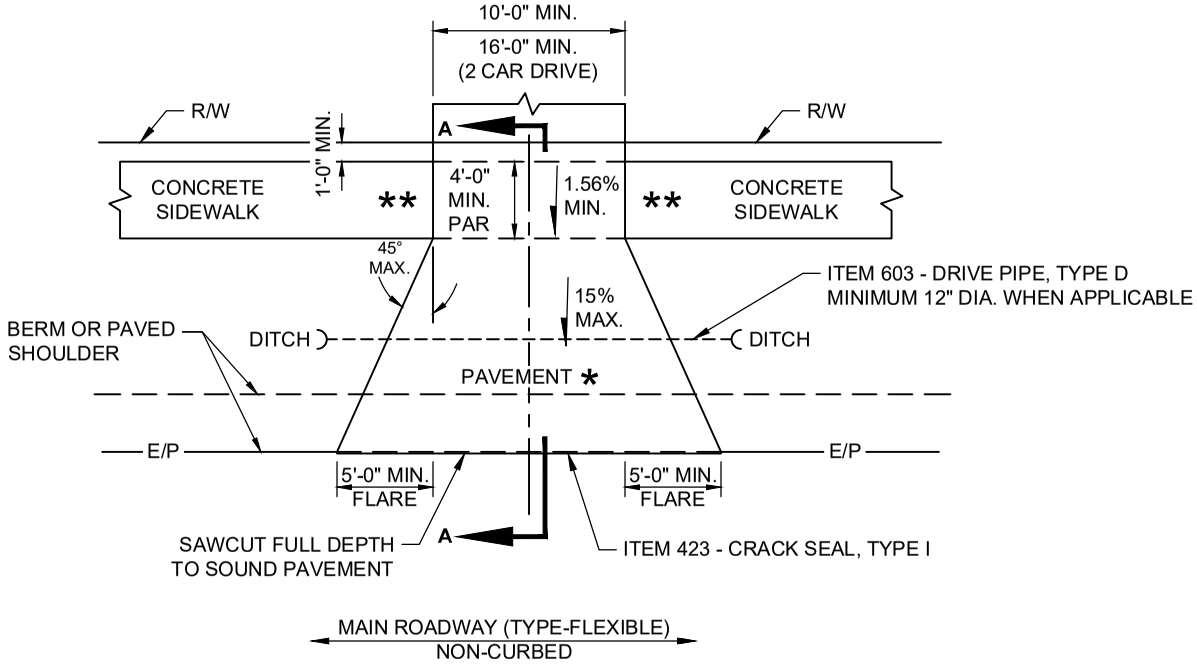

DRIVE PAVEMENT (TYPE, FLEXIBLE)

DRIVEWAY, RESIDENTIAL NON-CURBED ROADWAY

CITY OF COLUMBUS, OHIO
DEPARTMENT OF PUBLIC SERVICE
DIVISION OF DESIGN AND CONSTRUCTION

STD DWG 2206

04/30/18

SHT 1 OF 3

CITY ENGINEER

FOR USE ON A PARCEL WITH A SINGLE DWELLING

* REPLACEMENT OF EXISTING DRIVES SHALL MATCH PAVEMENT (TYPE, DESIGN) IN KIND TO EXISTING DRIVE. NEW DRIVES SHALL BE PAVEMENT (TYPE, DESIGN) SIMILAR TO MAIN ROADWAY (TYPE, DESIGN).

DRIVE PAVEMENT (TYPE, RIGID)
ITEM 452 - 6" NON-REINFORCED PORTLAND CEMENT CONCRETE

** SIDEWALK SHALL BE PER STANDARD DRAWING 2300. SIDEWALK THICKNESS SHALL BE 6" CONCRETE TO ONE FULL PANEL (MIN. 5 FT.) BEYOND EDGE OF DRIVE.

PAR = PEDESTRIAN ACCESS ROUTE. SET PAR THROUGH APPROACH AT SIDEWALK GRADE TO AVOID RAMP OR TRANSITION. IF NOT POSSIBLE, THEN MINIMIZE TRANSITION FROM SIDEWALK TO APPROACH.

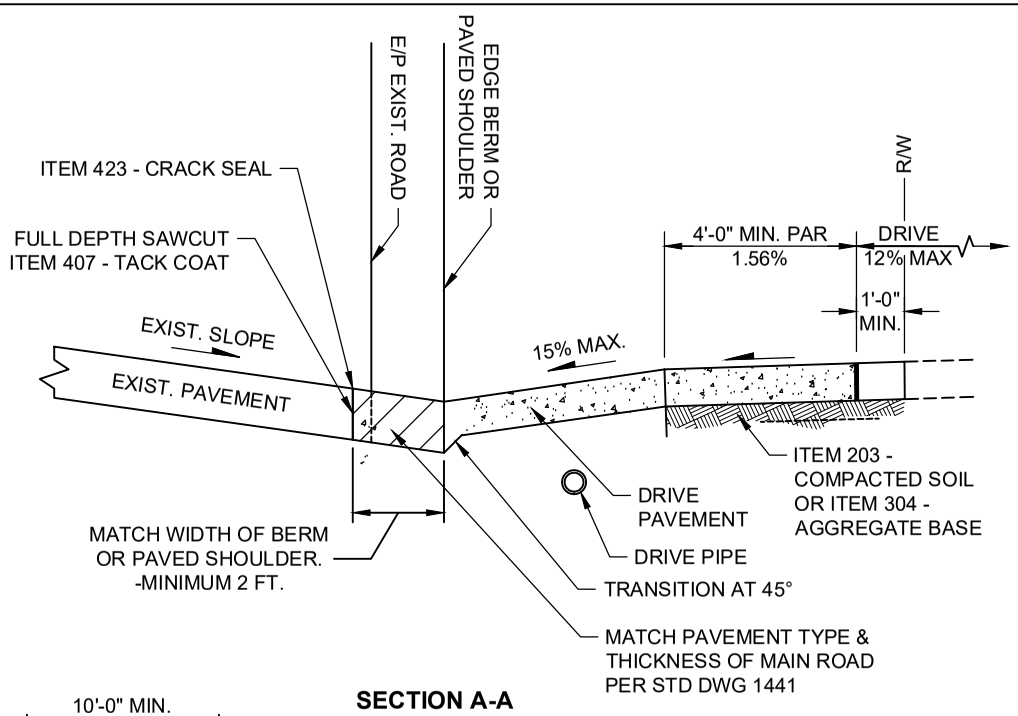

SECTION A-A

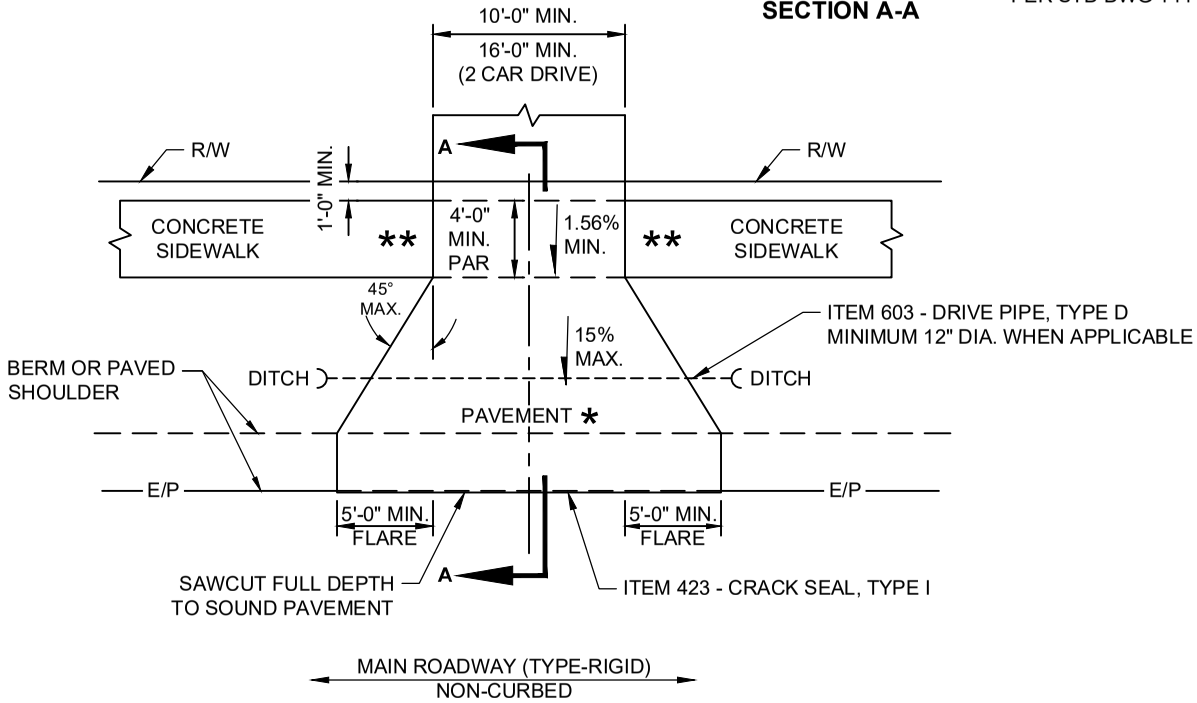

DRIVE PAVEMENT (TYPE, RIGID)

DRIVEWAY, RESIDENTIAL NON-CURBED ROADWAY

CITY OF COLUMBUS, OHIO
DEPARTMENT OF PUBLIC SERVICE
DIVISION OF DESIGN AND CONSTRUCTION

STD DWG
2206
04/30/18
SHT 2 OF 3

FOR USE ON A NON-RESIDENTIAL PARCEL

* REPLACEMENT OF EXISTING DRIVES SHALL MATCH PAVEMENT (TYPE, DESIGN) IN KIND TO EXISTING DRIVE. NEW DRIVES SHALL BE PAVEMENT (TYPE, DESIGN) SIMILAR TO MAIN ROADWAY (TYPE, DESIGN).

DRIVE PAVEMENT (TYPE, RIGID)
ITEM 452 - 8" NON-REINFORCED PORTLAND CEMENT CONCRETE

** SIDEWALK SHALL BE PER STANDARD DRAWING 2300. SIDEWALK THICKNESS SHALL BE 8" CONCRETE TO ONE FULL PANEL (MIN. 5 FT.) BEYOND EDGE OF DRIVE.

PAR = PEDESTRIAN ACCESS ROUTE. SET PAR THROUGH APPROACH AT SIDEWALK GRADE TO AVOID RAMP OR TRANSITION. IF NOT POSSIBLE, THEN MINIMIZE TRANSITION FROM SIDEWALK TO APPROACH.

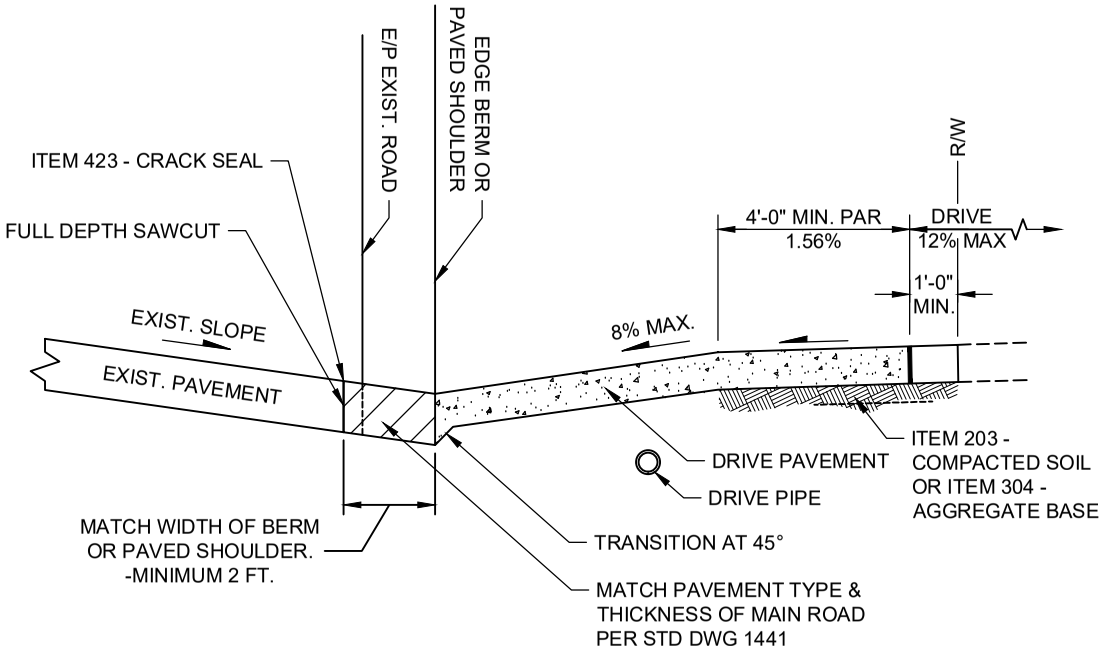

SECTION A-A

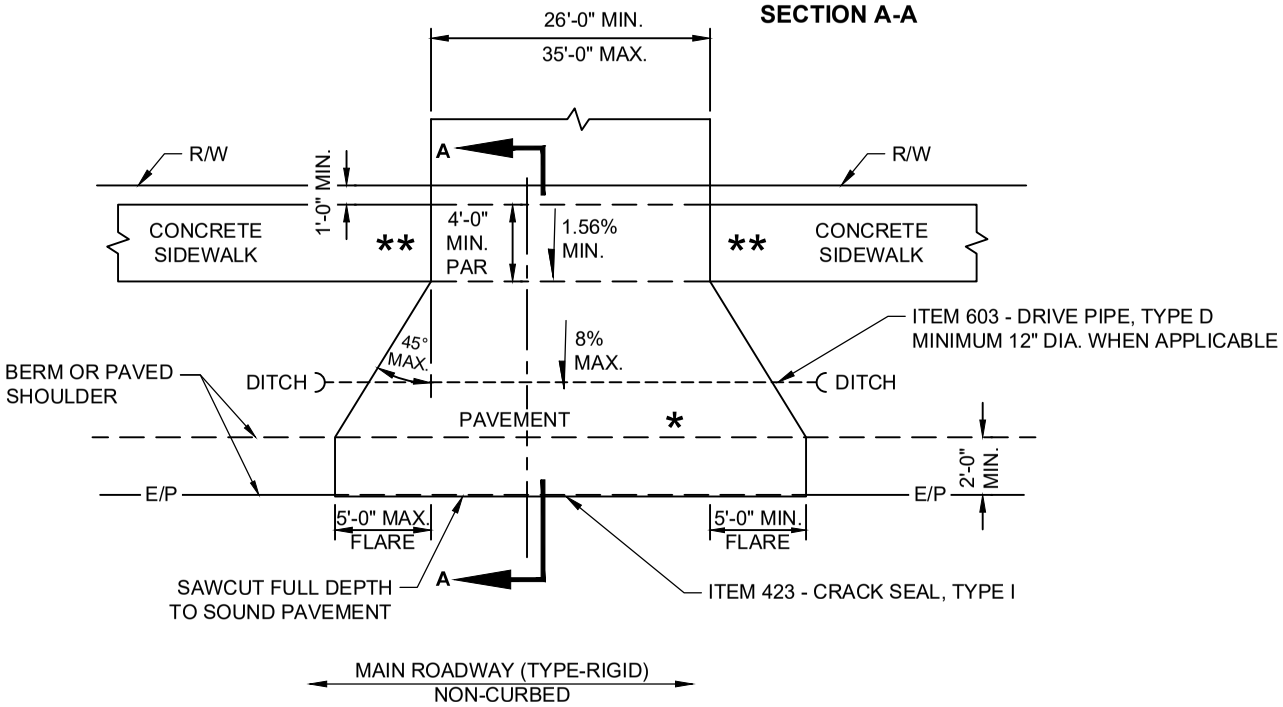

DRIVE PAVEMENT (TYPE, RIGID)

DRIVEWAY, NON-RESIDENTIAL NON-CURBED ROADWAY

CITY OF COLUMBUS, OHIO
DEPARTMENT OF PUBLIC SERVICE
DIVISION OF DESIGN AND CONSTRUCTION

STD DWG
2206
04/30/18
SHT 3 OF 3

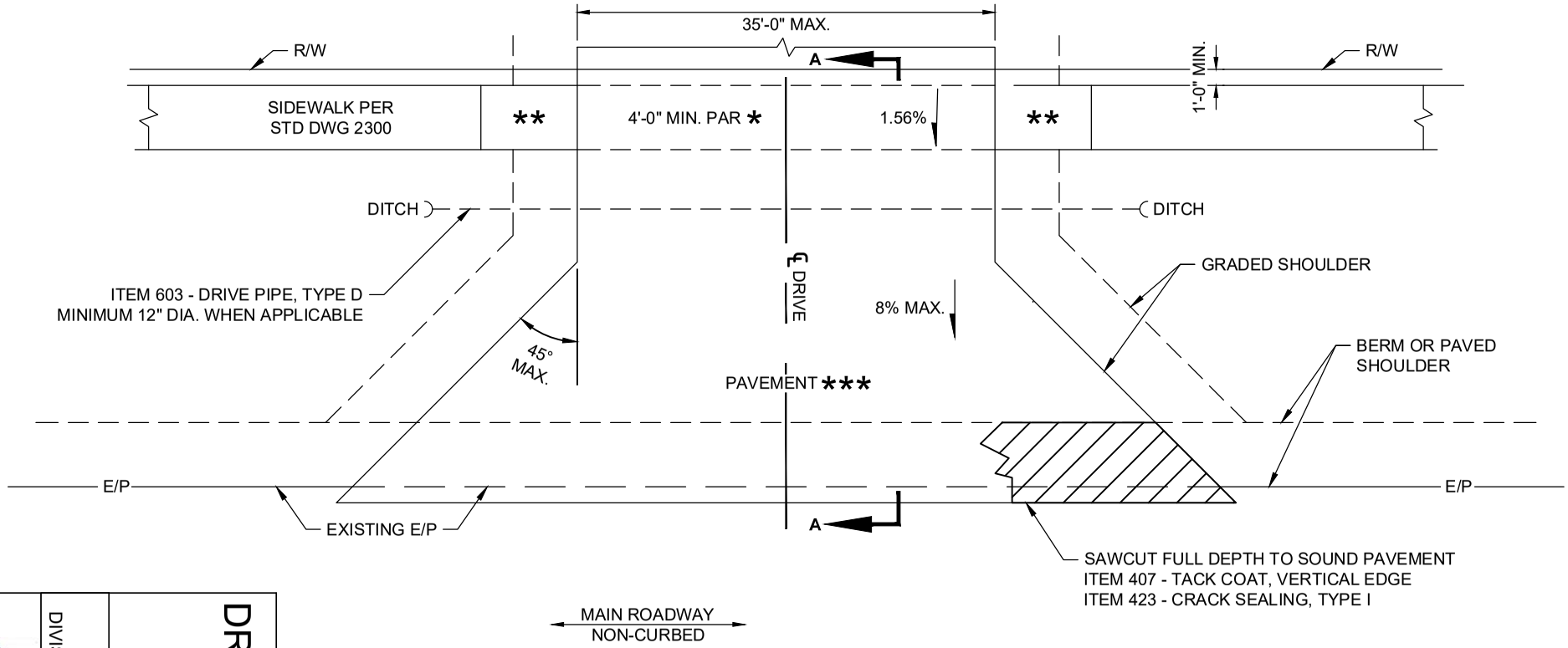

DO NOT REPLACE PAVED SHOULDER IF SHOULDER HAS EQUAL OR GREATER PAVEMENT BUILD-UP.

* PAR = PEDESTRIAN ACCESS ROUTE. SET PAR THROUGH APPROACH AT SIDEWALK GRADE TO AVOID RAMP OR TRANSITION. IF NOT POSSIBLE, THEN MINIMIZE TRANSITION FROM SIDEWALK TO APPROACH.

** 8" THICK CONCRETE SIDEWALK FOR 1 FULL PANEL (MIN. 5 FT.) BEYOND EDGE OF DRIVE.

*** DRIVE PAVEMENT (FLEXIBLE DESIGN)
ITEM 441 - 1.5" ASPHALT CONCRETE, SURFACE COURSE, (TYPE 1), PG 64-22
ITEM 441 - 6.5" ASPHALT CONCRETE, INTERMEDIATE COURSE, (TYPE 2), PG 64-22 (MULTIPLE LIFTS)
ITEM 304 - 4" AGGREGATE BASE

DRIVEWAY, NON-RESIDENTIAL WITH FLARES NON-CURBED ROADWAY

CITY OF COLUMBUS, OHIO
DEPARTMENT OF PUBLIC SERVICE
DIVISION OF DESIGN AND CONSTRUCTION

STD DWG
2207

04/30/18

SHT 1 OF 2

CITY ENGINEER

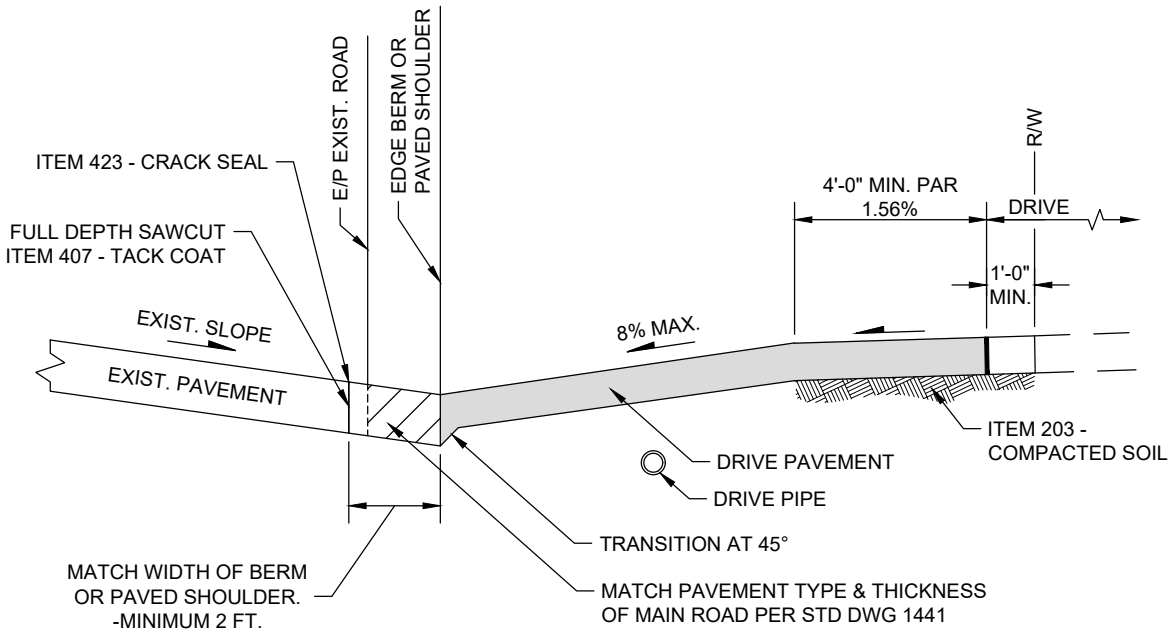

SECTION A-A

DRIVEWAY, NON-RESIDENTIAL WITH FLARES NON-CURBED ROADWAY

CITY OF COLUMBUS, OHIO
DEPARTMENT OF PUBLIC SERVICE
DIVISION OF DESIGN AND CONSTRUCTION

STD DWG
2207

04/30/18

SHT 2 OF 2

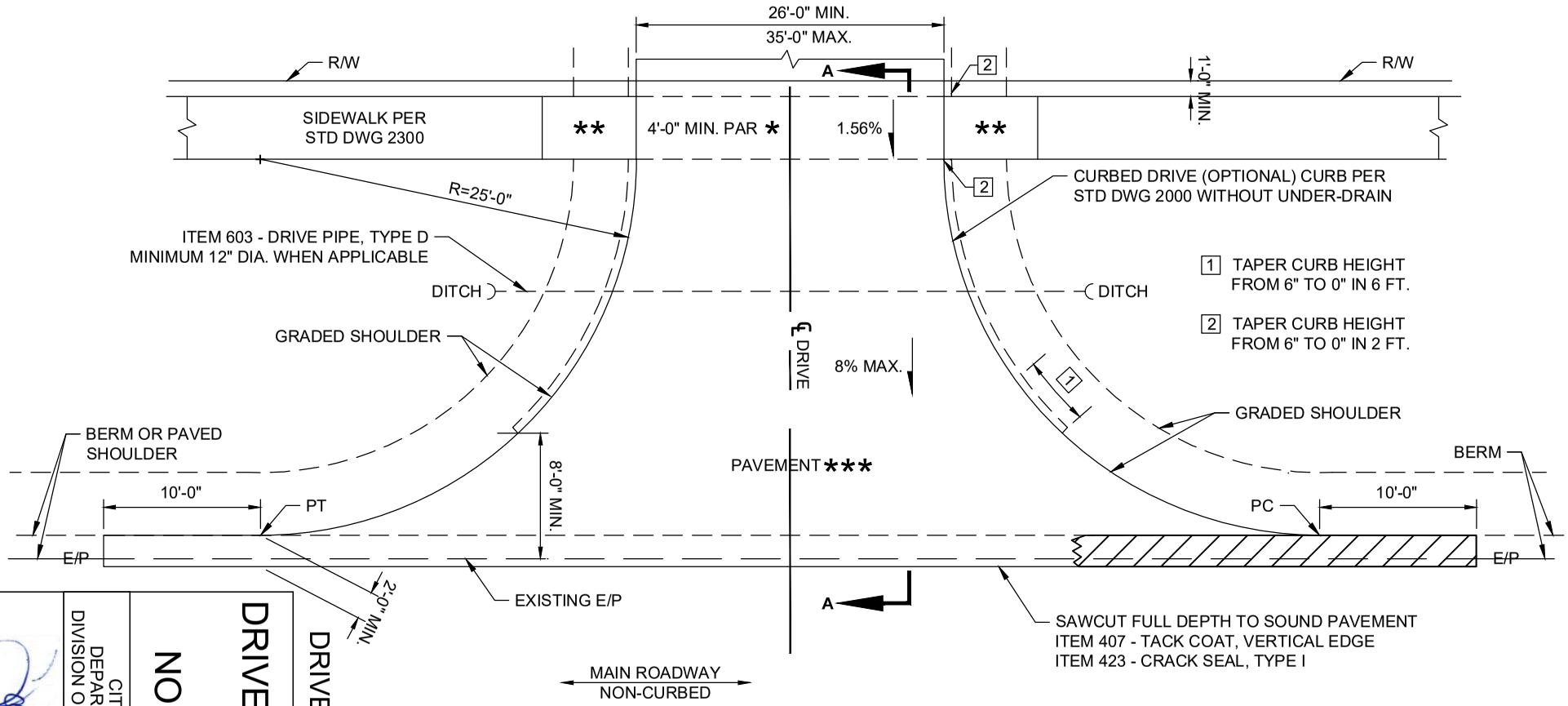

DO NOT REPLACE PAVED SHOULDER IF SHOULDER HAS EQUAL OR GREATER PAVEMENT BUILD-UP.

* PAR = PEDESTRIAN ACCESS ROUTE. SET PAR THROUGH APPROACH AT SIDEWALK GRADE TO AVOID RAMP OR TRANSITION. IF NOT POSSIBLE, THEN MINIMIZE TRANSITION FROM SIDEWALK TO APPROACH.

** 8" THICK CONCRETE SIDEWALK FOR 1 FULL PANEL (MIN. 5 FT.) BEYOND EDGE OF DRIVE.

*** DRIVE PAVEMENT (FLEXIBLE DESIGN)
ITEM 441 - 1.5" ASPHALT CONCRETE, SURFACE COURSE, (TYPE 1), PG 64-22
ITEM 441 - 6.5" ASPHALT CONCRETE, INTERMEDIATE COURSE, (TYPE 2), PG 64-22 (MULTIPLE LIFTS)
ITEM 304 - 4" AGGREGATE BASE

DRIVE PAVEMENT (TYPE, FLEXIBLE)

DRIVEWAY, NON-RESIDENTIAL WITH RADIUS NON-CURBED ROADWAY

CITY OF COLUMBUS, OHIO
DEPARTMENT OF PUBLIC SERVICE
DIVISION OF DESIGN AND CONSTRUCTION

CITY ENGINEER

STD DWG
2208

04/30/18

SHT 1 OF 4

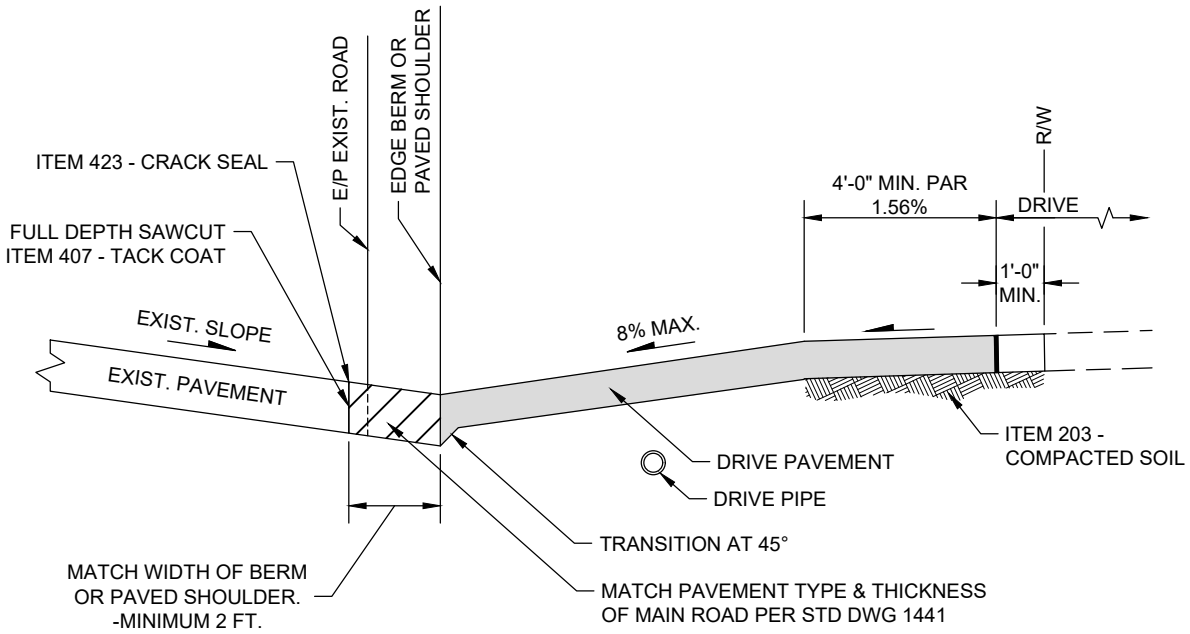

SECTION A-A

DRIVE PAVEMENT (TYPE, FLEXIBLE)

DRIVEWAY, NON-RESIDENTIAL WITH RADIUS NON-CURBED ROADWAY

CITY OF COLUMBUS, OHIO
DEPARTMENT OF PUBLIC SERVICE
DIVISION OF DESIGN AND CONSTRUCTION

STD DWG
2208

04/30/18

SHT 2 OF 4

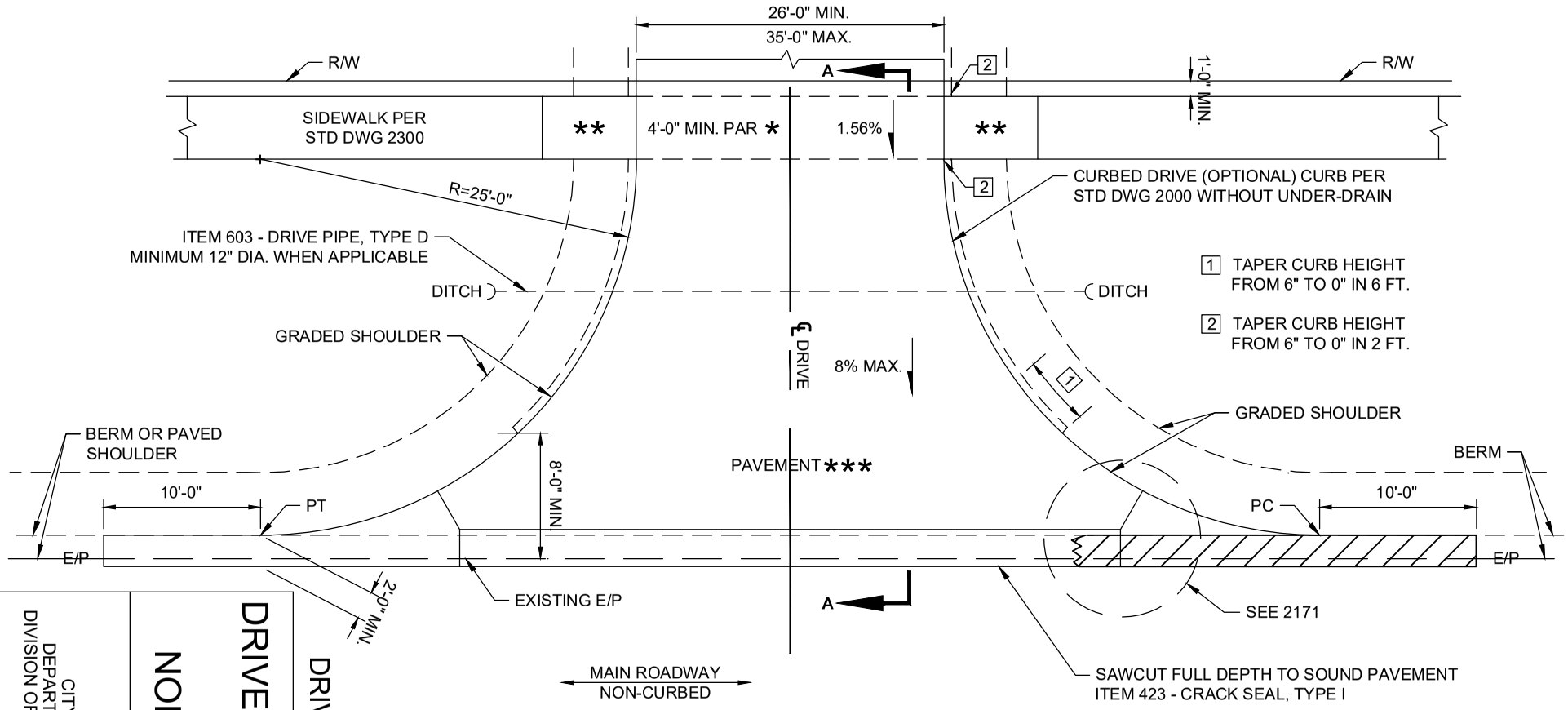

DO NOT REPLACE PAVED SHOULDER IF SHOULDER HAS EQUAL OR GREATER PAVEMENT BUILD-UP.

* PAR = PEDESTRIAN ACCESS ROUTE. SET PAR THROUGH APPROACH AT SIDEWALK GRADE TO AVOID RAMP OR TRANSITION. IF NOT POSSIBLE, THEN MINIMIZE TRANSITION FROM SIDEWALK TO APPROACH.

** 8" THICK CONCRETE SIDEWALK FOR 1 FULL PANEL (MIN. 5 FT.) BEYOND EDGE OF DRIVE.

*** DRIVE PAVEMENT (RIGID DESIGN)
ITEM 452 - 8" NON-REINFORCED PORTLAND CEMENT CONCRETE.

DRIVE PAVEMENT (TYPE, RIGID)

DRIVEWAY, NON-RESIDENTIAL WITH RADIUS NON-CURBED ROADWAY

CITY OF COLUMBUS, OHIO
DEPARTMENT OF PUBLIC SERVICE
DIVISION OF DESIGN AND CONSTRUCTION

STD DWG
2208

04/30/18

SHT 3 OF 4

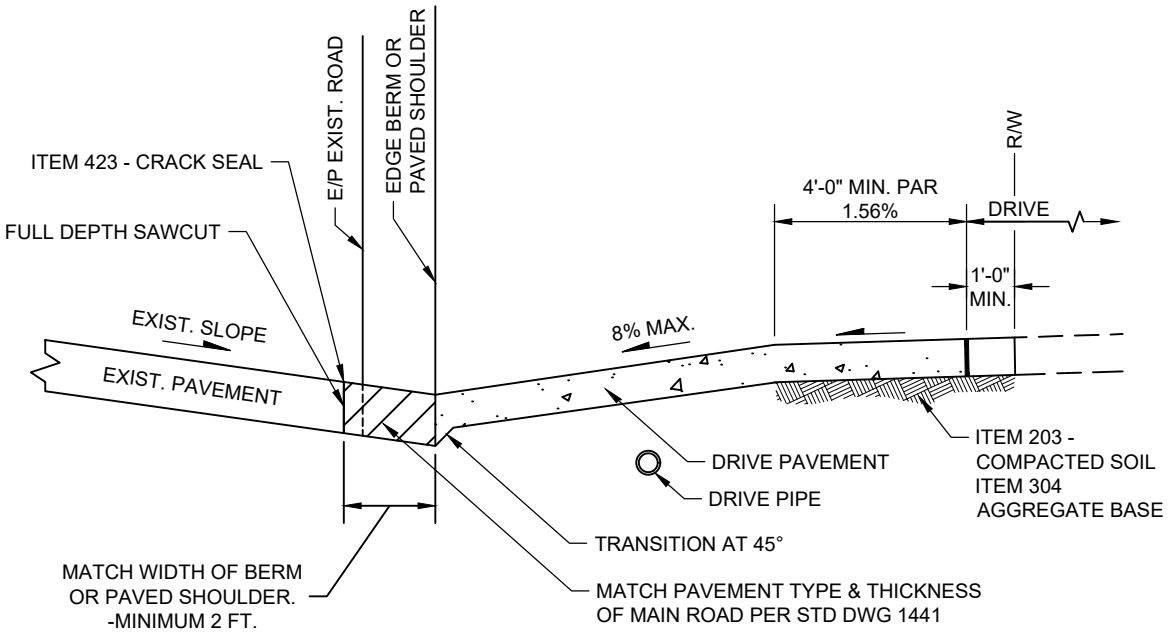

SECTION A-A

DRIVE PAVEMENT (TYPE, RIGID)

DRIVEWAY, NON-RESIDENTIAL WITH RADIUS NON-CURBED ROADWAY

CITY OF COLUMBUS, OHIO
DEPARTMENT OF PUBLIC SERVICE
DIVISION OF DESIGN AND CONSTRUCTION

STD DWG
2208

04/30/18

SHT 4 OF 4

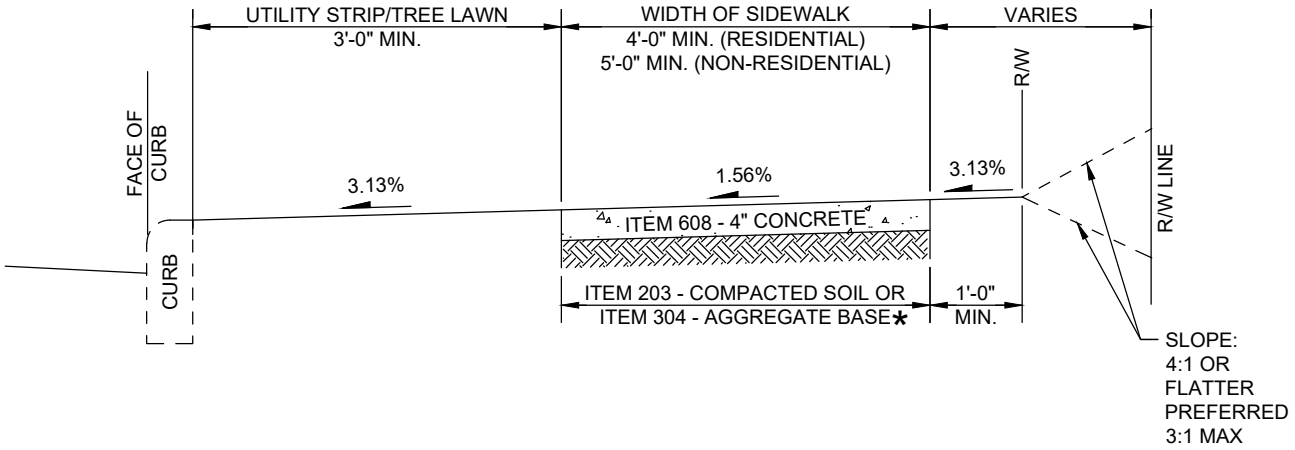

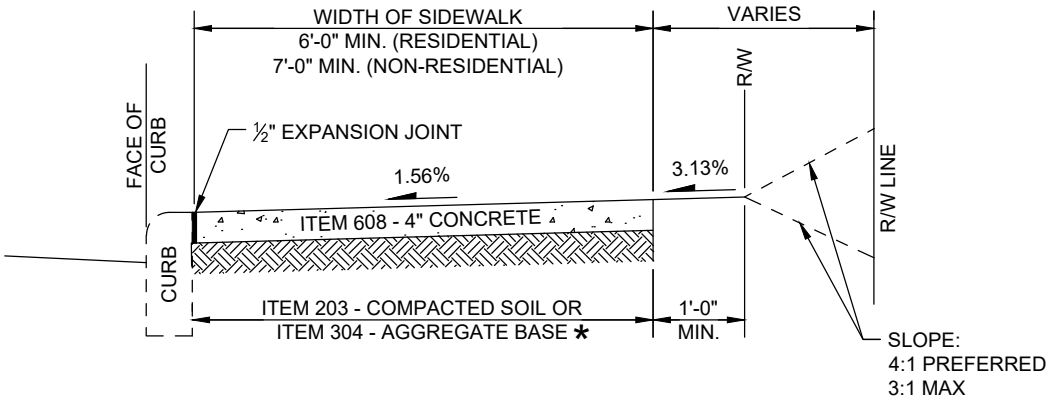

WHERE SIDEWALKS ABUT DRIVEWAYS OR ALLEY APPROACHES, THE CONCRETE THICKNESS OF THE WALK SHALL EQUAL THE THICKNESS OF THE APPROACH (6" MINIMUM) FOR A DISTANCE OF ONE (1) FULL PANEL OR MINIMUM 5 FEET. SEE STANDARD DRAWING OF THE APPLICABLE DRIVEWAY OR ALLEY.

WHERE NEW WALK ABUTS ADJOINING WALK, SAWCUT EXISTING WALK TO NEAREST JOINT AND INSTALL EXPANSION JOINT.

EXPANSION JOINT LOCATION AND SPACING PER ITEM 608.03.

WATER AND UTILITY BOXES IN THE SIDEWALK AREA SHALL BE ADJUSTED FLUSH WITH FINAL SURFACE.

ROOF DRAINS SHALL BE EXTENDED UNDER THE SIDEWALK AND THROUGH THE CURB. SEE STD DWG 2320.

ITEM NUMBERS REFER TO THE CITY OF COLUMBUS CMSC, CURRENT EDITION. ALL WORK SHALL BE DONE IN ACCORDANCE WITH THESE SPECIFICATIONS.

* #57 AGGREGATE MAY BE USED FOR REPLACEMENT WORK.

SIDEWALK

CITY OF COLUMBUS, OHIO
DEPARTMENT OF PUBLIC SERVICE
DIVISION OF DESIGN AND CONSTRUCTION

CITY ENGINEER

STD DWG
2300

04/30/18

SHT 1 OF 1

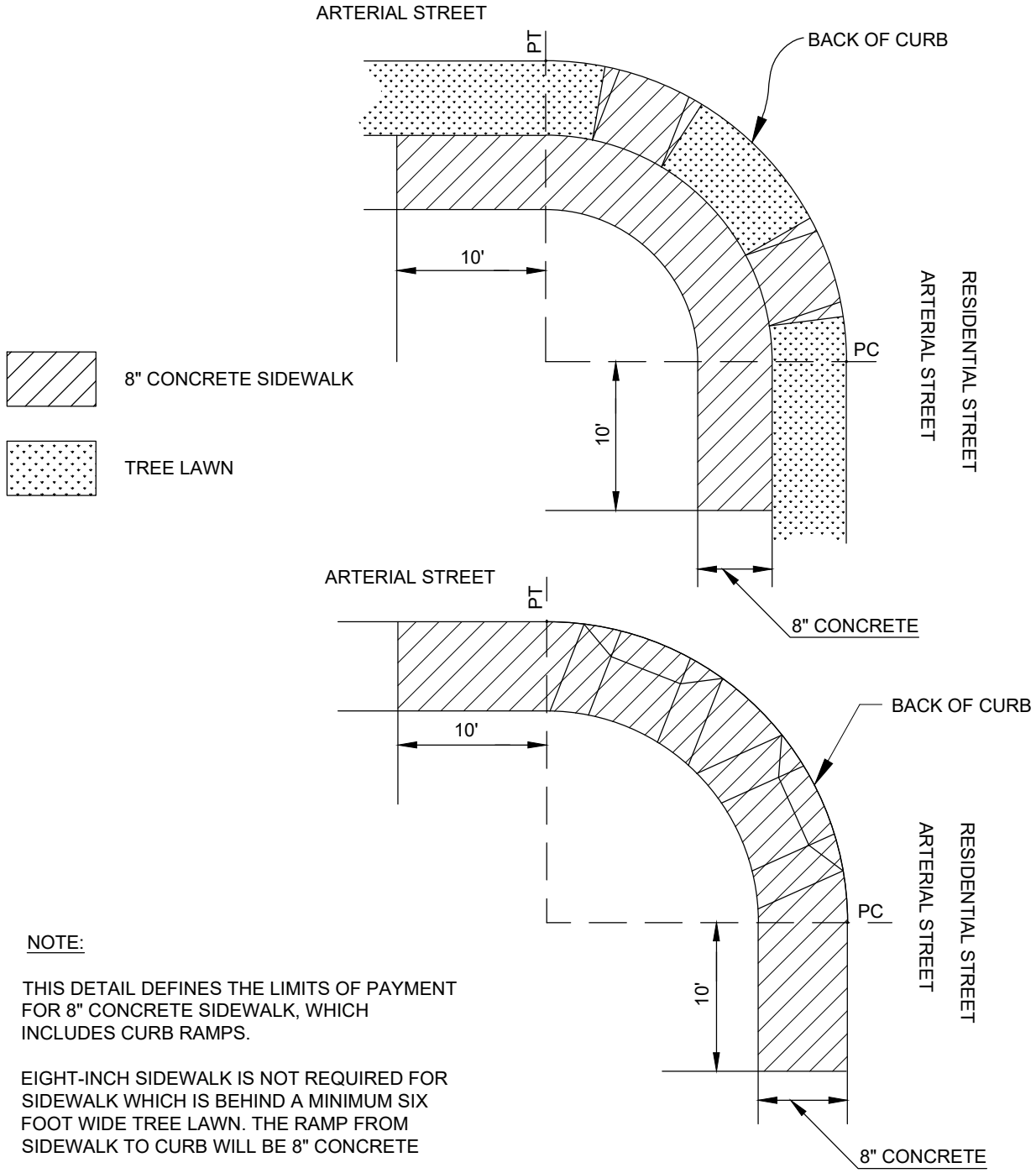

NOTE:

THIS DETAIL DEFINES THE LIMITS OF PAYMENT FOR 8" CONCRETE SIDEWALK, WHICH INCLUDES CURB RAMPS.

EIGHT-INCH SIDEWALK IS NOT REQUIRED FOR SIDEWALK WHICH IS BEHIND A MINIMUM SIX FOOT WIDE TREE LAWN. THE RAMP FROM SIDEWALK TO CURB WILL BE 8" CONCRETE

WHERE SIDEWALK ABUTS THE CURB, THE ENTIRE WIDTH OF THE SIDEWALK WITHIN THE LIMITS SHOWN SHALL BE 8" CONCRETE.

ALL OTHER CONCRETE SIDEWALK INSTALLED AT THIS LOCATION OUTSIDE THIS BOUNDARY WILL BE PAID AT THE 4" CONCRETE SIDEWALK PRICE. ANY CHANGES TO THIS CRITERIA OR DETAIL MUST BE APPROVED BY THE ENGINEER.

WHERE NO CURB EXISTS PROVIDE 8" CONCRETE FROM EDGE OF PAVEMENT TO WALK OR PUSHBUTTON.

8" CONCRETE SIDEWALK AT AN INTERSECTION WITH AN ARTERIAL STREET

CITY OF COLUMBUS, OHIO DEPARTMENT OF PUBLIC SERVICE DIVISION OF DESIGN AND CONSTRUCTION	STD DWG 2303
	07/01/20
CITY ENGINEER	SHT 1 OF 1

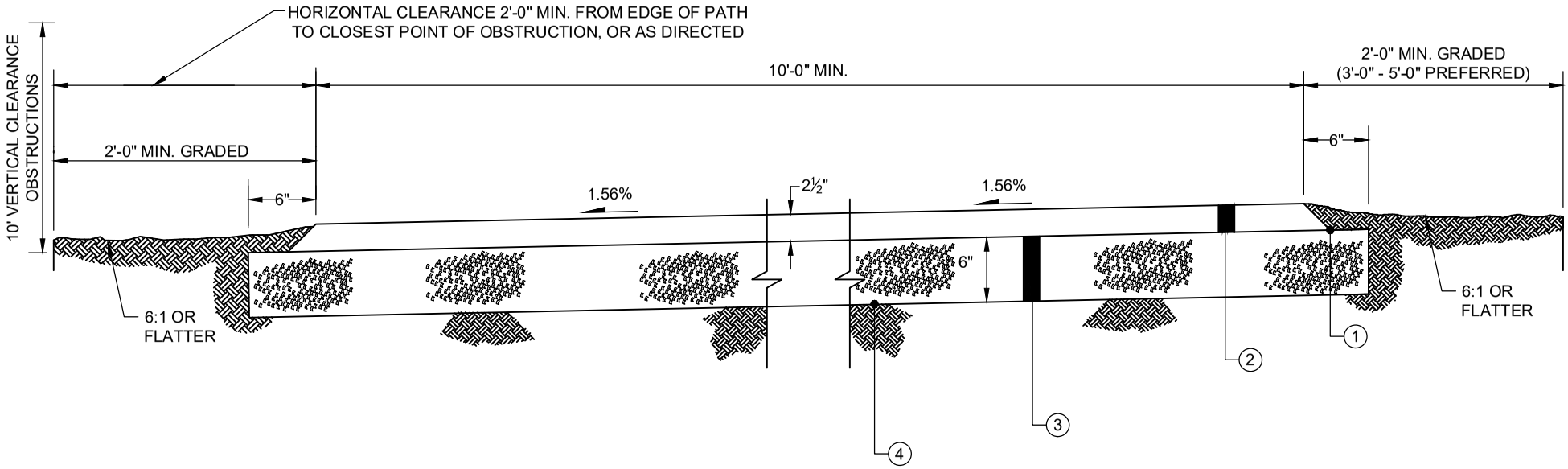

1. ANGLE HAND TAMP AT 45°
2. ITEM 441 - 2.5" ASPHALT CONCRETE SURFACE COURSE (LIGHT TRAFFIC), PG 64-22
3. ITEM 304 - 6" AGGREGATE BASE
4. ITEM 204 - SUBGRADE COMPACTION

PAVEMENT DETAIL

SHARED USE PATH

CITY OF COLUMBUS, OHIO
DEPARTMENT OF PUBLIC SERVICE
DIVISION OF DESIGN AND CONSTRUCTION

STD DWG
2310

04/30/18

SHT 1 OF 5

CITY ENGINEER

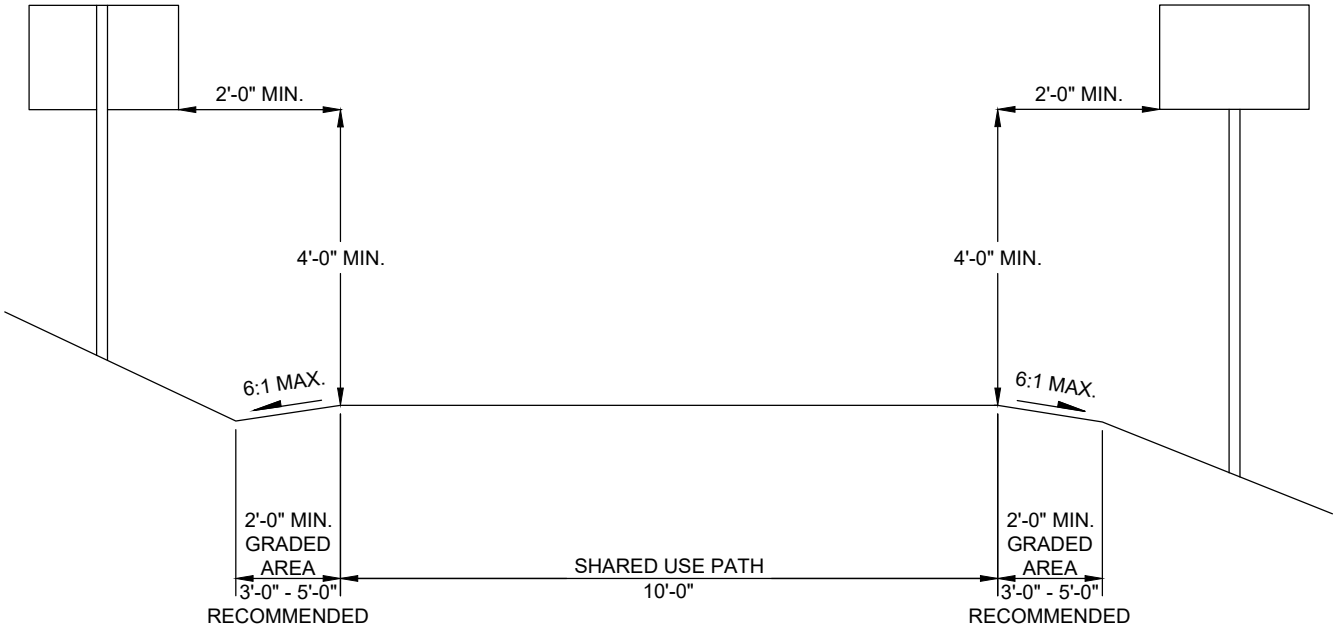

REFERENCE GUIDE TO BICYCLE FACILITIES,
CURRENT EDITION FOR SAFETY RAIL REQUIREMENTS.

SIGN DETAIL

SHARED USE PATH

CITY OF COLUMBUS, OHIO
DEPARTMENT OF PUBLIC SERVICE
DIVISION OF DESIGN AND CONSTRUCTION

STD DWG
2310

04/30/18

SHT 2 OF 5

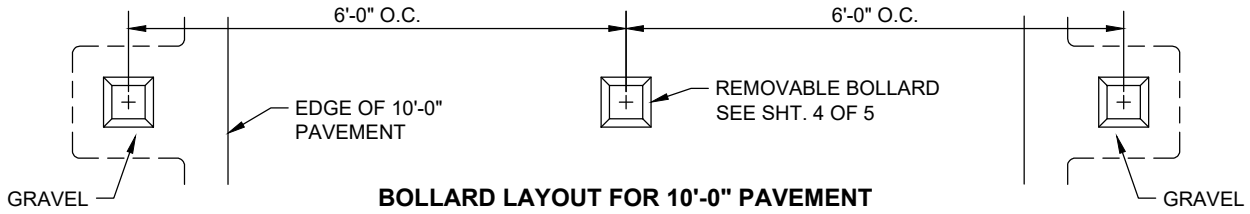

BOLLARD LAYOUT FOR 10'-0" PAVEMENT

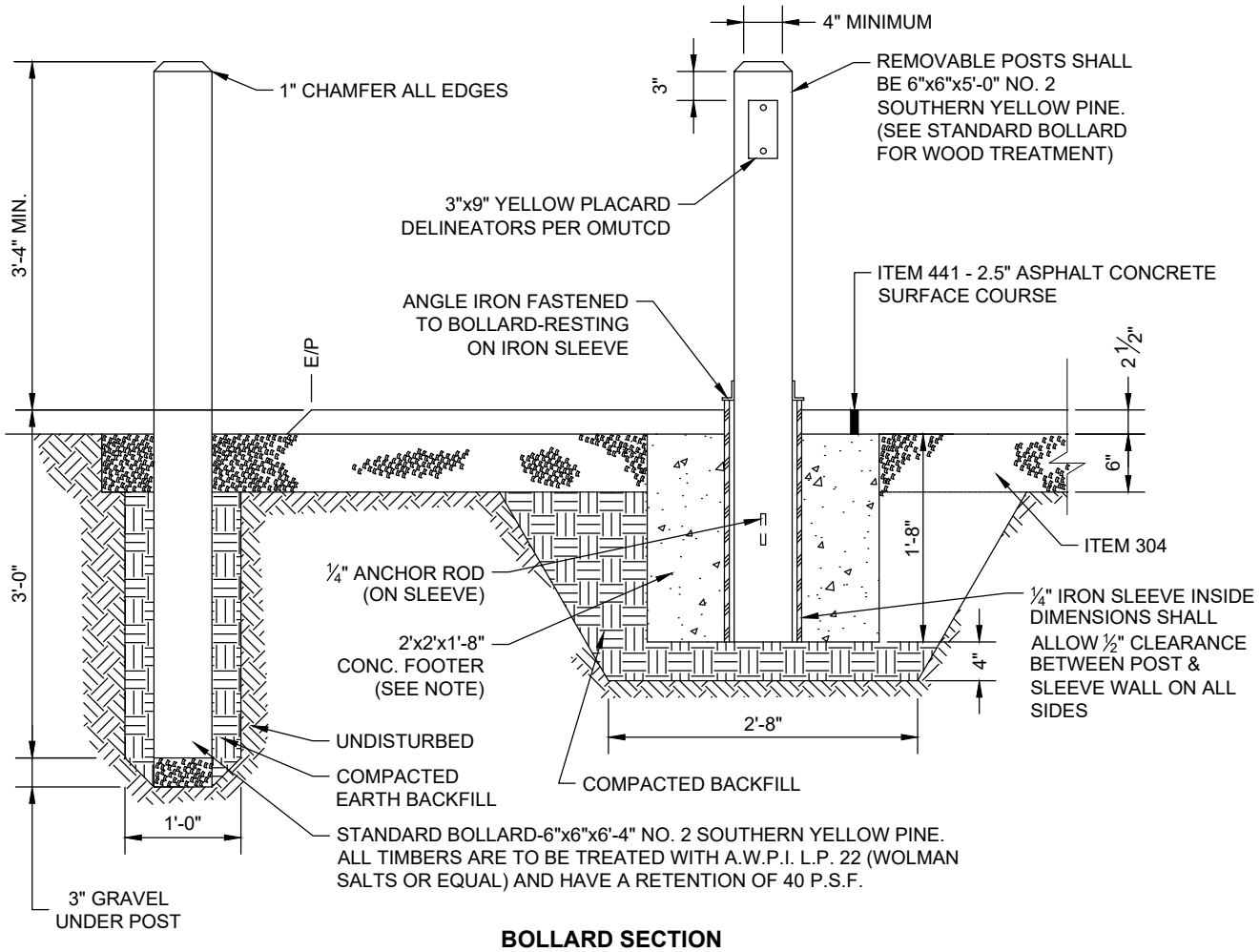

BOLLARD SECTION

THE CONTRACTOR SHALL INSTALL THE EARTH BACKFILL IN 6" LIFTS AND TAKE CARE TO PLUMB EACH POST.

THE IRON SLEEVES, ANGLE IRON, AND ANCHOR RODS SHALL BE PAINTED WITH TWO COATS OF RUST-OLEUM NO769 DAMP-PROOF RED PRIMER OR EQUAL PRIOR TO INSTALLATION.

THE CONTRACTOR MAY SUBSTITUTE A 24" CIRCULAR FOOTER IN PLACE OF THE ONE SHOWN BELOW.

WOOD BOLLARD DETAIL

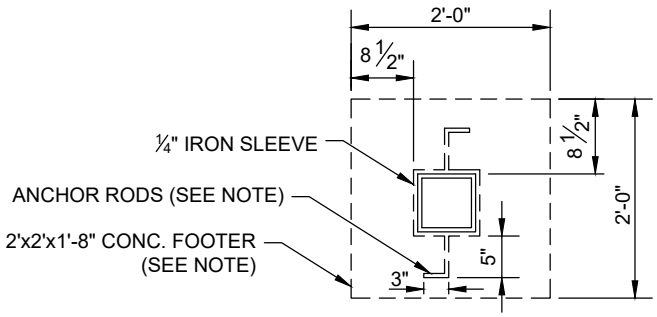

REMOVABLE BOLLARD

SHARED USE PATH

CITY OF COLUMBUS, OHIO
DEPARTMENT OF PUBLIC SERVICE
DIVISION OF DESIGN AND CONSTRUCTION

STD DWG
2310

04/30/18

SHT 3 OF 5

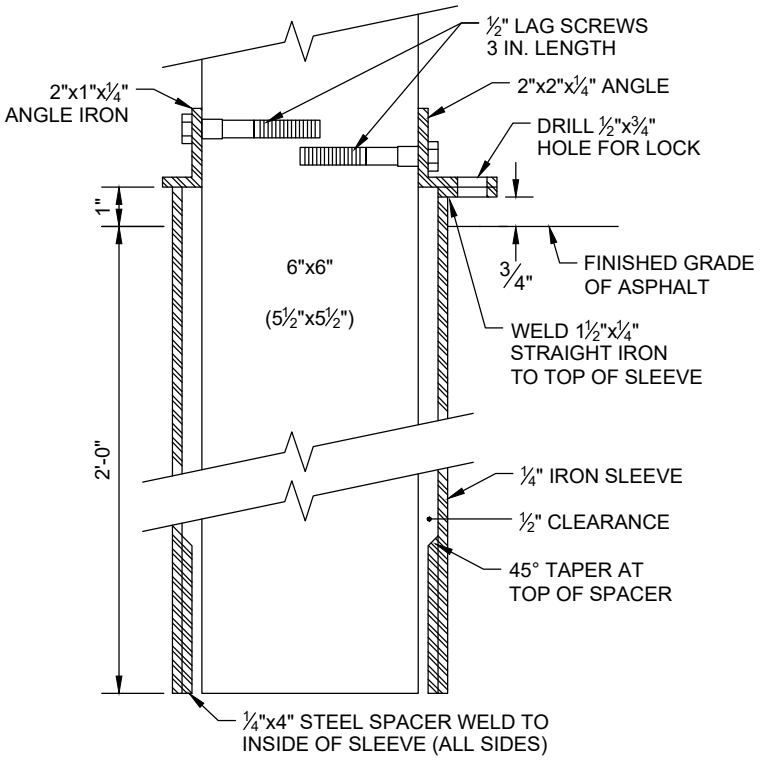

SECTION A-A

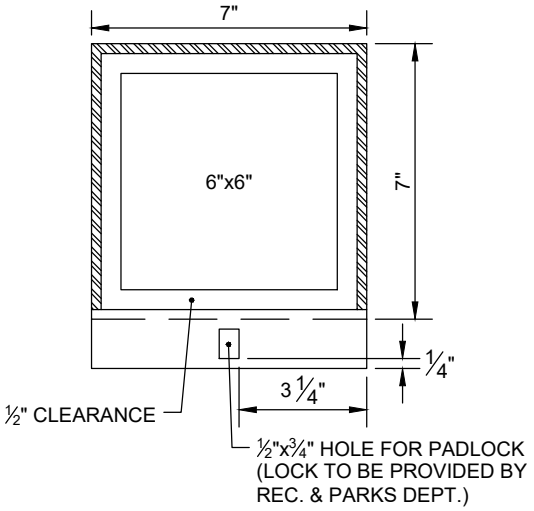

PLAN

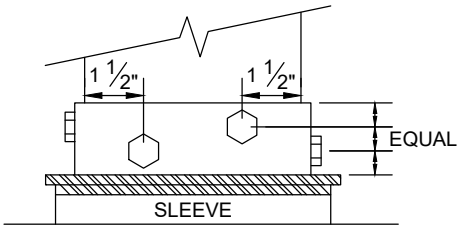

ELEVATION

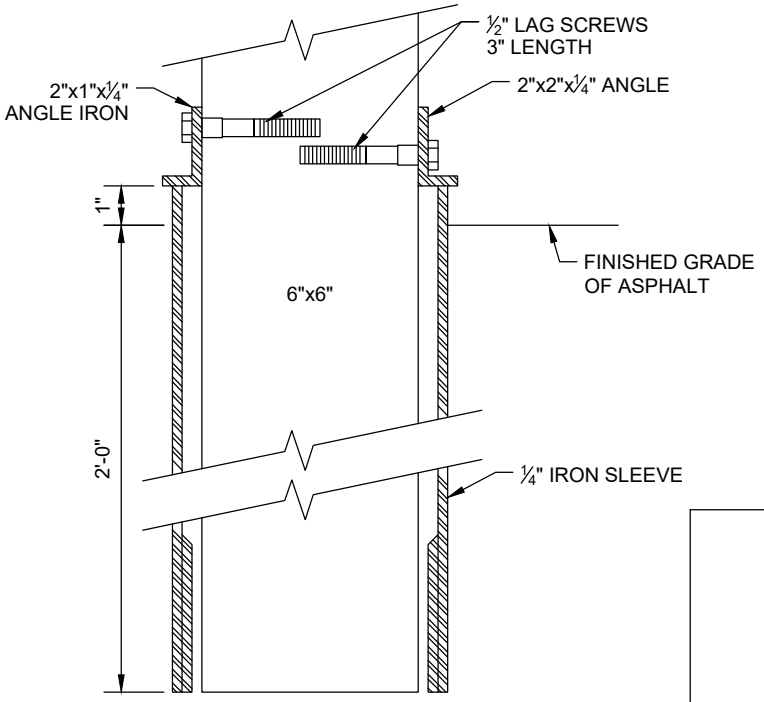

SECTION B-B

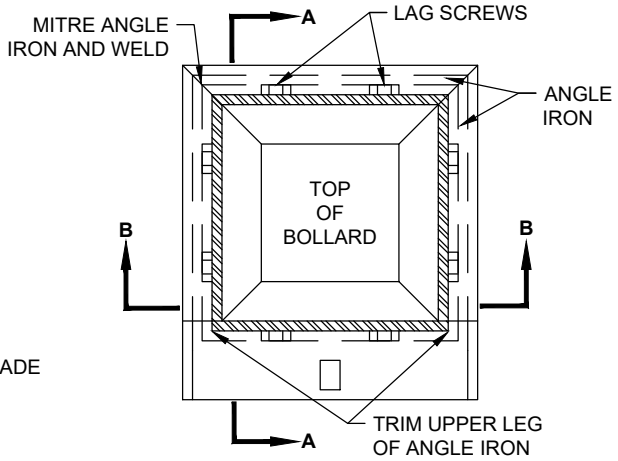

PLAN

REMOVABLE BOLLARD DETAIL

SHARED USE PATH

CITY OF COLUMBUS, OHIO
DEPARTMENT OF PUBLIC SERVICE
DIVISION OF DESIGN AND CONSTRUCTION

STD DWG
2310

04/30/18

SHT 4 OF 5

RAMPS SHALL BE ADA COMPLIANT: SEE STANDARD DRAWINGS 2319/2300.

EXISTING CURB OR COMBINATION CURB AND GUTTER SHALL BE REMOVED AND REPLACED AS REQUIRED FOR INSTALLATION OF RAMP. INSTALL EXPANSION JOINT AT BACK OF CURB. REFERENCE STANDARD DRAWINGS 2000/2010/2020/2030.

FOR REPLACEMENT WORK, THE CURB OR CURB/GUTTER SHALL BE REMOVED TO AN EXISTING JOINT OR NO CLOSER THAN 5 FT. FROM AN EXISTING JOINT. WHEN LESS THAN 5 FT. OF A CURB SECTION REMAINS AFTER THE CURB CUT IS LOCATED, IT ALSO SHALL BE REMOVED AND REPLACED. CURB SHALL BE CONSTRUCTED IN MIN. 5 FT. SECTIONS & MAX. 10 FT. SECTIONS.

FILLS, IF REQUIRED, SHALL BE PER ITEM 203 OR ITEM 304.

RAMP SHALL BE CONSTRUCTED PER ITEM 608.

EXPANSION JOINTS SHALL BE PLACED TO FORM UTILITY STRIPS WHERE REQUIRED AND WHEREVER NEW CONCRETE TOUCHES EXISTING CONSTRUCTION.

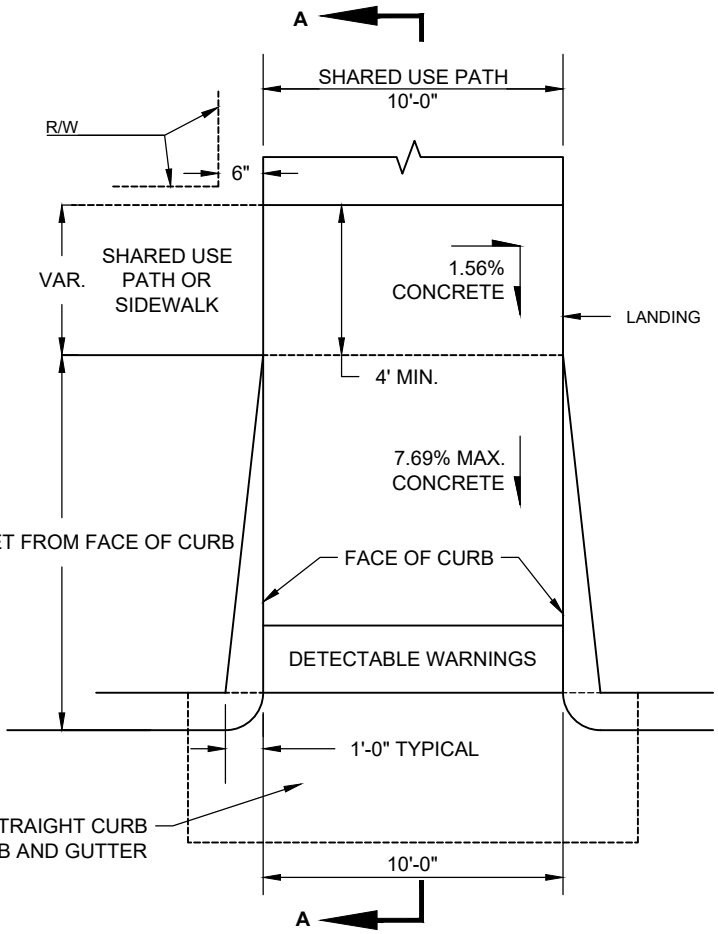

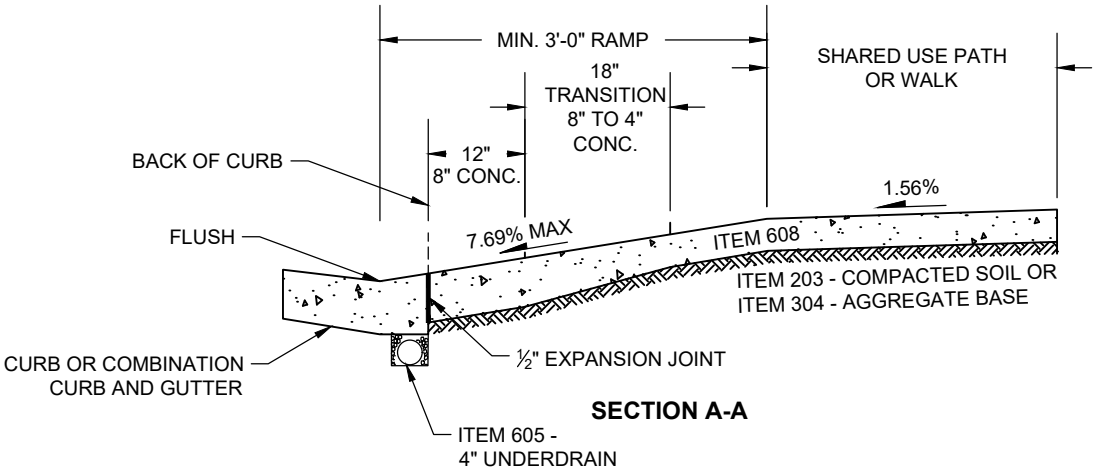

RAMP

SHARED USE PATH

CITY OF COLUMBUS, OHIO
DEPARTMENT OF PUBLIC SERVICE
DIVISION OF DESIGN AND CONSTRUCTION

STD DWG
2310

04/30/18

SHT 5 OF 5

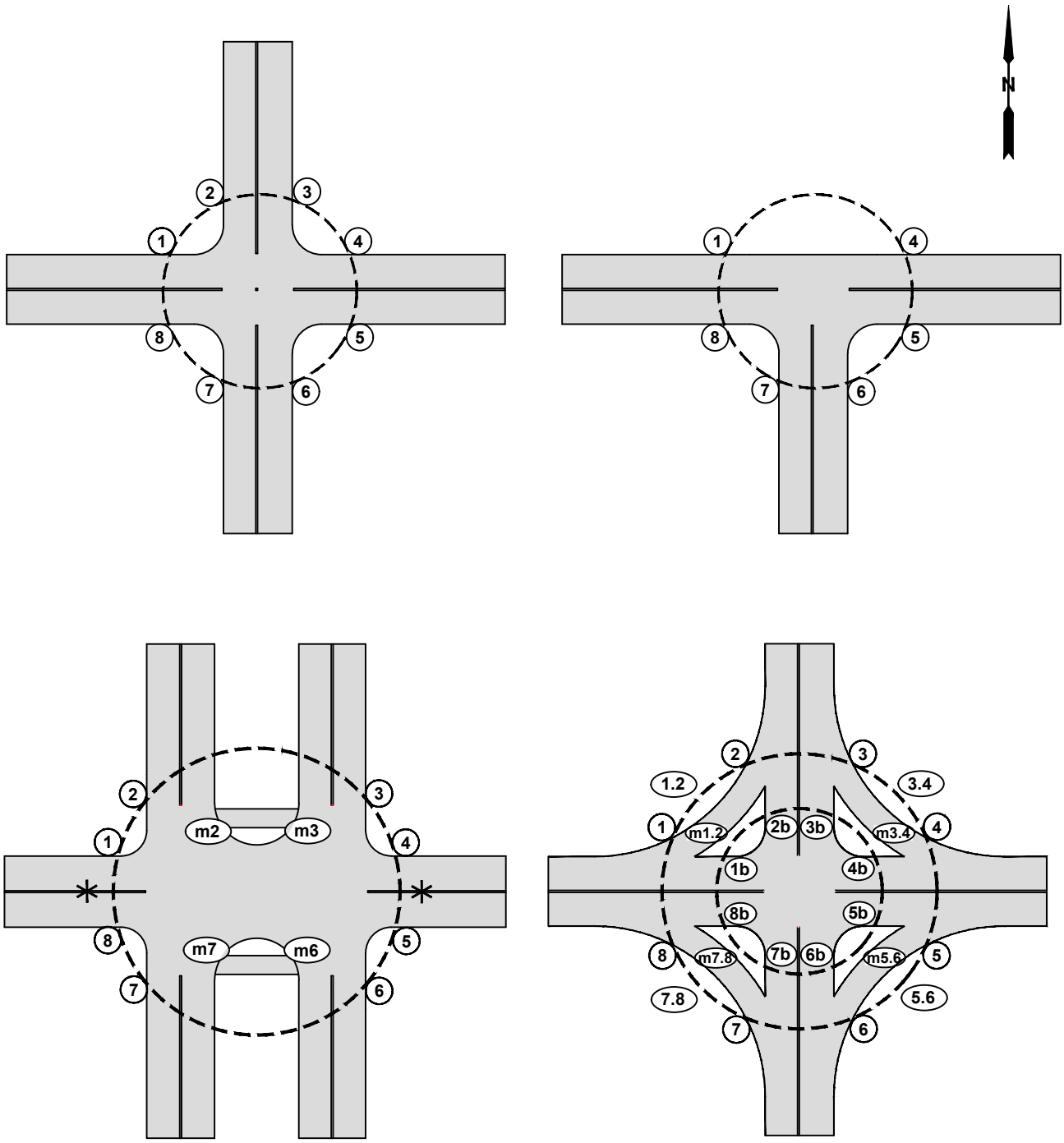

ALL NUMBERING BEGINS FROM THE NORTHWEST CORNER AND GOES CLOCKWISE. EACH CORNER HAS ITS SPECIFIC NUMBER THAT SHALL BE USED IF CURB RAMPS ARE IN THESE LOCATIONS.

* MEDIAN RAMPS ON THE WEST AND/OR EAST LEGS WOULD BE M1, M8, AND M4, M5 RESPECTIVELY.

INTERSECTION CURB RAMP NUMBERING SYSTEM

CITY OF COLUMBUS, OHIO
DEPARTMENT OF PUBLIC SERVICE
DIVISION OF DESIGN AND CONSTRUCTION

CITY ENGINEER

STD DWG
2319

3/30/2018

SHT 1 OF 21

GENERAL NOTES, CURB RAMPS

1. CURB RAMPS SHALL BE INSTALLED PER STD DWGS 2300, 2319, CMSC 608, AND DPS ADA RULES AND REGULATIONS.
2. MATERIAL: THE RAMP PANEL AND FLARED SIDES SHALL BE CONCRETE.
3. RAMP TYPES ARE CATEGORIZED BELOW IN TIERS BY REQUIRED ORDER OF USE. LOCATING THE RAMP AS CLOSE AS POSSIBLE TO THE INTERSECTION FOLLOWING THE CURB RAMP DESIGN BOUNDARY CONTAINED IN THE ADA RULES AND REGULATIONS IS THE FIRST PRIORITY. THE DESIGNER SHALL NOT USE A LOWER TIERED RAMP WITHOUT FIRST DETERMINING AND HAVING JUSTIFICATION THAT THE UPPER TIER RAMPS ARE NOT CONSTRUCTIBLE.

CITY OF COLUMBUS RAMP TYPE HIERARCHY

TIER 1 (THESE PERPENDICULAR RAMPS SHOULD BE UTILIZED WHENEVER POSSIBLE.)

- TYPE D
- TYPE C
- TYPE A

TIER 2 (PARALLEL RAMPS SHOULD ONLY BE USED DUE TO RIGHT OF WAY (ROW) OR OTHER SPACE CONSTRAINTS WHERE A TIER 1 RAMP CANNOT BE USED.)

- TYPE P-6 (6' OF ROW AVAILABLE)
- TYPE P-7 (7' OF ROW AVAILABLE)
- TYPE P-5 (5' OF ROW AVAILABLE)
- TYPE P-4 (4' OF ROW AVAILABLE)

TIER 3 (TIER 3 RAMPS CAN ONLY BE USED WITH WRITTEN APPROVAL BY THE CITY ENGINEER OR DESIGNEE. TIER 3 RAMPS SHALL BE IDENTIFIED IN THE DESIGN SCOPE OR APPROVAL REQUESTED BY THE DESIGNER JUSTIFYING THAT THIS RAMP TYPE IS NECESSARY.)

- TYPE J (MODIFIED ALLEY RAMP), USE SHOULD BE LIMITED DUE TO DRAINAGE CONCERNS
- RADIAL RAMPS
- SINGLE SHARED RAMPS

SPECIALTY RAMPS (SHALL ONLY BE USED FOR THE LISTED SITUATION, OR WRITTEN APPROVAL BY THE CITY ENGINEER OR DESIGNEE.)

- TYPE G - ONLY TO BE USED ON ALLEY CROSSINGS
- TYPE H - ONLY TO BE USED ON ALLEY CROSSINGS
- TYPE L-1 - ONLY FOR MEDIAN CROSSINGS
- TYPE L-2 - ONLY FOR MEDIAN CROSSINGS
- PEDESTRIAN PADS - USED FOR ACCESS TO PUSHBUTTONS WHERE THERE IS NO EXISTING SIDEWALK. THE INTENT IS TO PROVIDE ACCESS TO CROSS THE INTERSECTION IN BOTH DIRECTIONS WITHOUT ENTERING THE STREET TO ACCESS TO OTHER CROSSING. THE FOLLOWING IS THE ORDER OF PREFERENCE ON PEDESTRIAN PADS:
    1. PP-1 TWO CONNECTED RAMPS WITH UTILITY STRIP
    2. PP-2 TWO CONNECTED RAMPS WITH SIDEWALK AGAINST CURB
    3. PP-3 USED AS SINGLE SHARED RAMP THAT CAN ACCESS BOTH CROSSWALK LEGS AND THE PUSHBUTTON
    4. PP-3 USED TO ONLY ACCESS THE LEG OF THE INTERSECTION CONTROLLED BY THE PUSHBUTTON

4. RAMP RUNNING SLOPE: THE RUNNING SLOPE SHALL BE NO GREATER THAN 7.69%.
5. ALL JOINTS BETWEEN NEW AND EXISTING MATERIALS SHALL BE FLUSH.
6. LANDINGS:
    - LANDINGS SHALL HAVE A MAXIMUM 1.56% SLOPE IN ALL DIRECTIONS FOR ALL CURB RAMP TYPES.
    - A PARALLEL RAMP, CONSTRAINED ON TWO (2) SIDES, E.G., TYPE P-7, SHALL HAVE A LANDING 5-FT WIDE BY 5-FT DEEP A PARALLEL RAMP, CONSTRAINED ON ONE (1) SIDE, E.G., TYPES P-4, 5, & 6, SHALL HAVE A LANDING NO LESS THAN 4-FT MINIMUM BY 5-FT. THE 5-FT DIMENSION SHALL BE PROVIDED AS SHOWN IN THESE STANDARD DRAWINGS.

CURB RAMP GENERAL NOTES

CITY OF COLUMBUS, OHIO
DEPARTMENT OF PUBLIC SERVICE
DIVISION OF DESIGN AND CONSTRUCTION

STD DWG
2319

3/30/2018

- ALL PERPENDICULAR RAMPS SHALL HAVE A LANDING NO LESS THAN 4-FT MINIMUM BY 4-FT. A PERPENDICULAR RAMP THAT IS CONSTRAINED AT THE BACK OF SIDEWALK SHALL HAVE A LANDING 4-FT BY 5-FT. THE 5-FT DIMENSION SHALL BE PROVIDED IN THE DIRECTION OF RAMP RUN, AS SHOWN IN THESE STANDARD DRAWINGS.
- LANDING AT INTERSECTING SIDEWALKS - WHEREVER SIDEWALKS INTERSECT, THERE SHALL BE A LANDING.

7. STREET COUNTER SLOPE: THE COUNTER SLOPE AT THE BASE OF THE RAMP SHALL BE A MAXIMUM OF 5% FOR A MINIMUM OF 2-FT.
8. CLEAR SPACE: AT MARKED CROSSINGS THE RAMP AND STREET CLEAR SPACE MUST BE FULLY CONTAINED WITHIN THE MARKED CROSSWALK. AT UNMARKED CROSSINGS THE RAMP AND CLEAR MUST BE WITHIN THE CURB RAMP DESIGN BOUNDARY.
9. SURFACES: RAMP, FLARE, AND LANDING SURFACES MUST BE STABLE AND SLIP RESISTANT. RAMPS SHALL BE BROOM FINISHED, TRANSVERSE TO THE DIRECTION OF TRAVEL. GRATINGS, VALVE BOXES, AND UTILITY BOXES SHALL NOT BE LOCATED IN THE RAMP OR LANDING.
10. DETECTABLE WARNINGS: DETECTABLE WARNINGS SHALL BE INSTALLED ACCORDING TO THESE STANDARD DRAWINGS, CMSC 608, AND DPS ADA RULES AND REGULATIONS.
11. CURB WALLS MAY BE NECESSARY FOR CURB RAMP CONSTRUCTION WHERE SPACE RESTRICTION DO NOT ALLOW FOR GRADING WITHIN ROW AT A 3:1 SLOPE OR FLATTER. THE MAXIMUM HEIGHT OF 6" THICK, NON-REINFORCED CURB WALL IS 12" ABOVE THE SIDEWALK SURFACE. THE BURIED PORTION OF THE NON-REINFORCED CURB WALL SHALL BE EQUAL TO THE EXPOSED REVEAL. RETAINING EMBANKMENT TO A HEIGHT OF MORE THAN 12" ABOVE THE SIDEWALK WILL REQUIRE A DESIGNED RETAINING WALL OR CELLULAR WALL.
12. RAMPS MUST BE CONSTRUCTED TO ALLOW FOR POSITIVE DRAINAGE. THE RAMP ITSELF SHALL NOT HOLD EXCESS WATER AND THE ADJACENT PAVEMENT SHALL NOT BE ALTERED TO INHIBIT FLOW OF WATER. IF AN EXISTING CONSTRAINT PREVENTS BUILDING THE RAMP AND ADJACENT AREA WITH POSITIVE DRAINAGE IT MUST BE BROUGHT TO THE CITY'S ATTENTION PRIOR TO CONSTRUCTION AND FINAL DESIGN APPROVED BY THE CITY.

CURB RAMP GENERAL NOTES

CITY OF COLUMBUS, OHIO
DEPARTMENT OF PUBLIC SERVICE
DIVISION OF DESIGN AND CONSTRUCTION

STD DWG
2319

3/30/2018

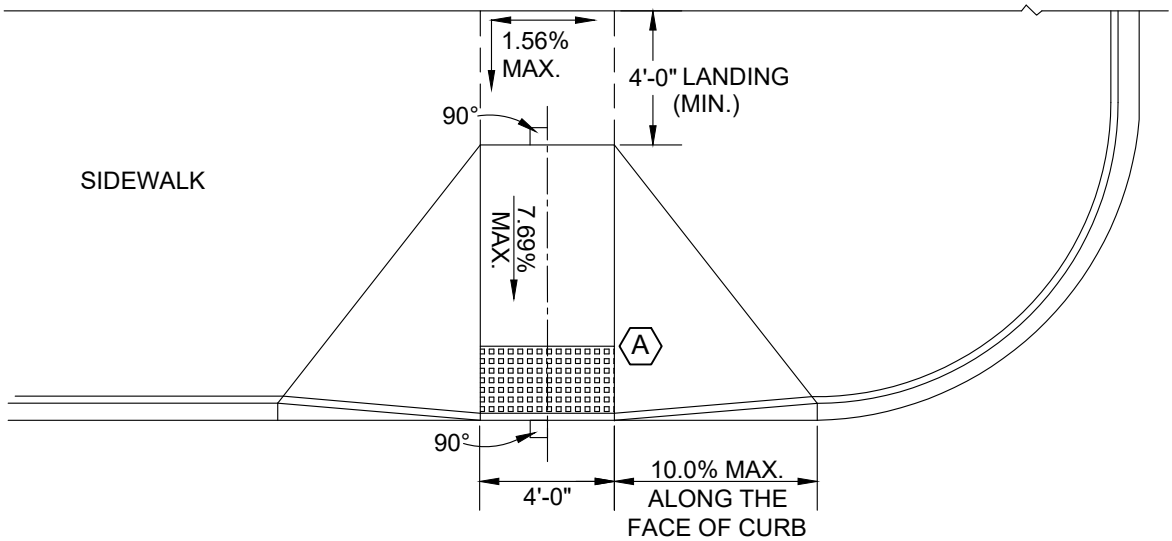

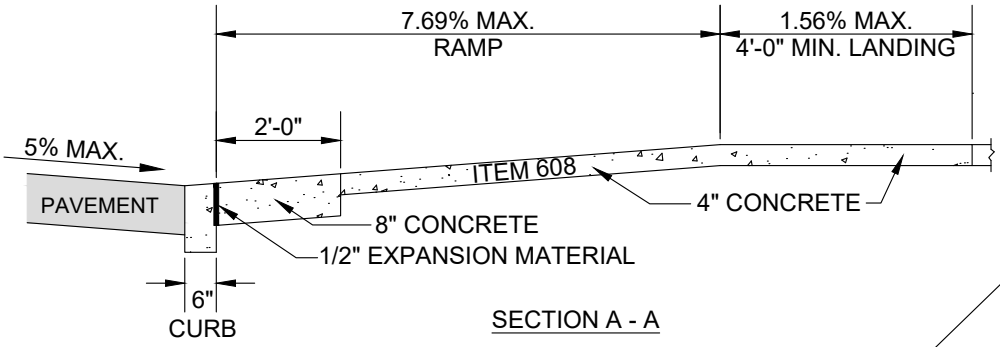

SECTION A - A

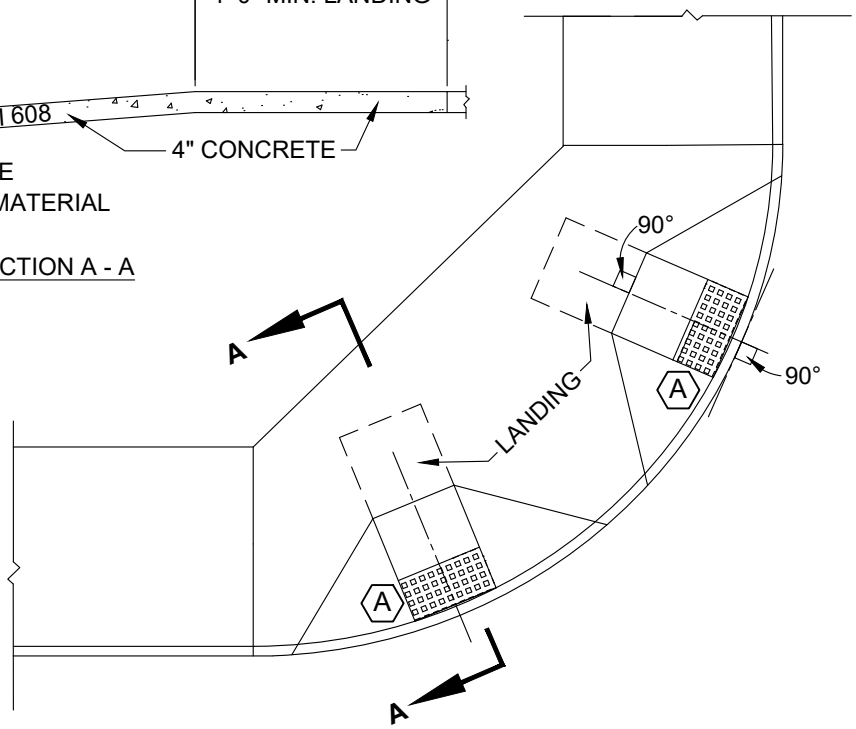

CODED NOTES:

(A) SEE SHEET 21 FOR DETECTABLE WARNING DETAILS

GENERAL NOTES:

1. SEE SHEET 2 FOR ADDITIONAL DETAILED INFORMATION.

CURB RAMP
TYPE A

CITY OF COLUMBUS, OHIO
DEPARTMENT OF PUBLIC SERVICE
DIVISION OF DESIGN AND CONSTRUCTION

STD DWG
2319

3/30/2018

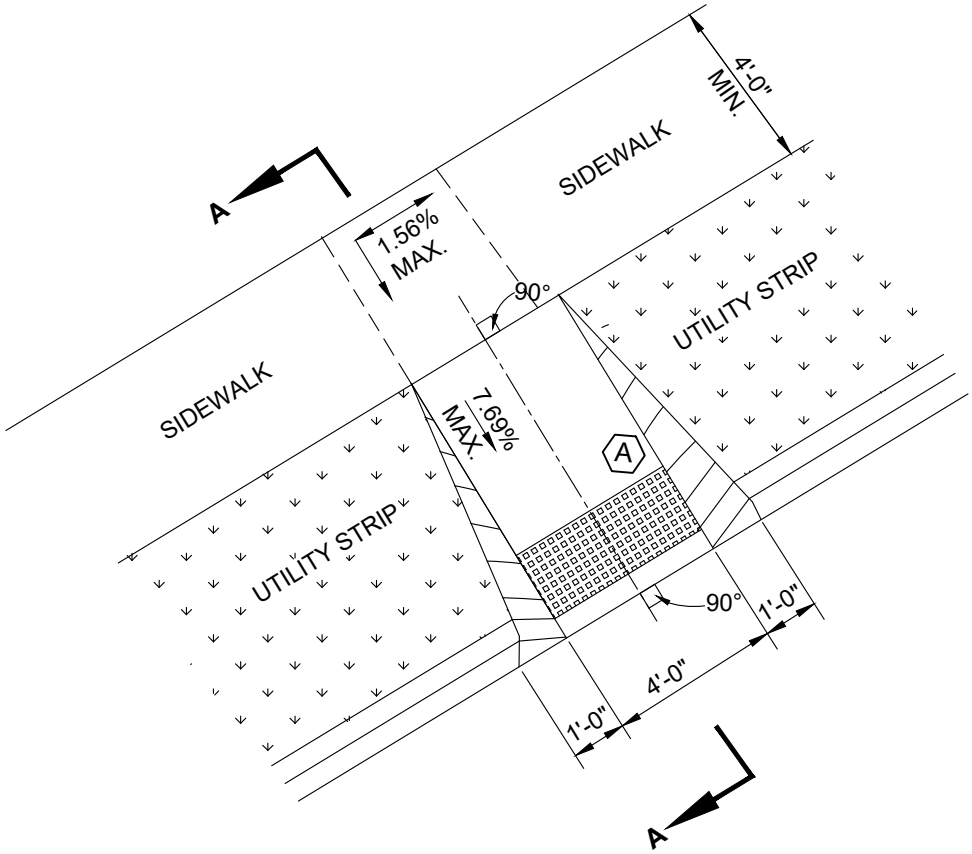

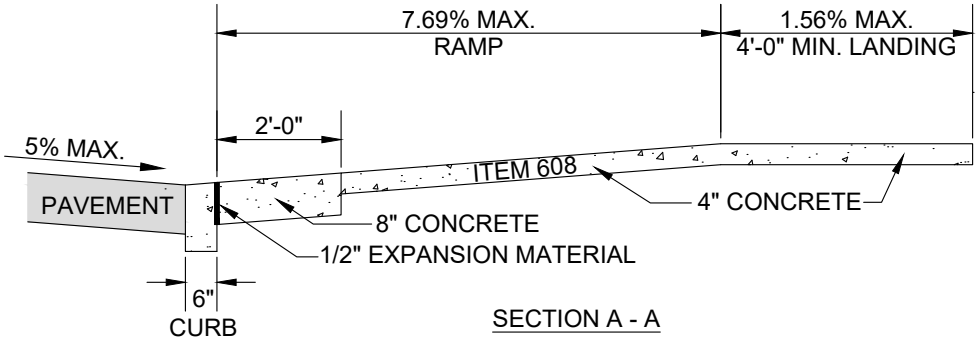

SECTION A - A

CODED NOTES:

(A) SEE SHEET 21 FOR DETECTABLE WARNING DETAILS

GENERAL NOTES:

1. SEE SHEET 2 FOR ADDITIONAL DETAILED INFORMATION.

CURB RAMP TYPE C

CITY OF COLUMBUS, OHIO
DEPARTMENT OF PUBLIC SERVICE
DIVISION OF DESIGN AND CONSTRUCTION

STD DWG
2319

3/30/2018

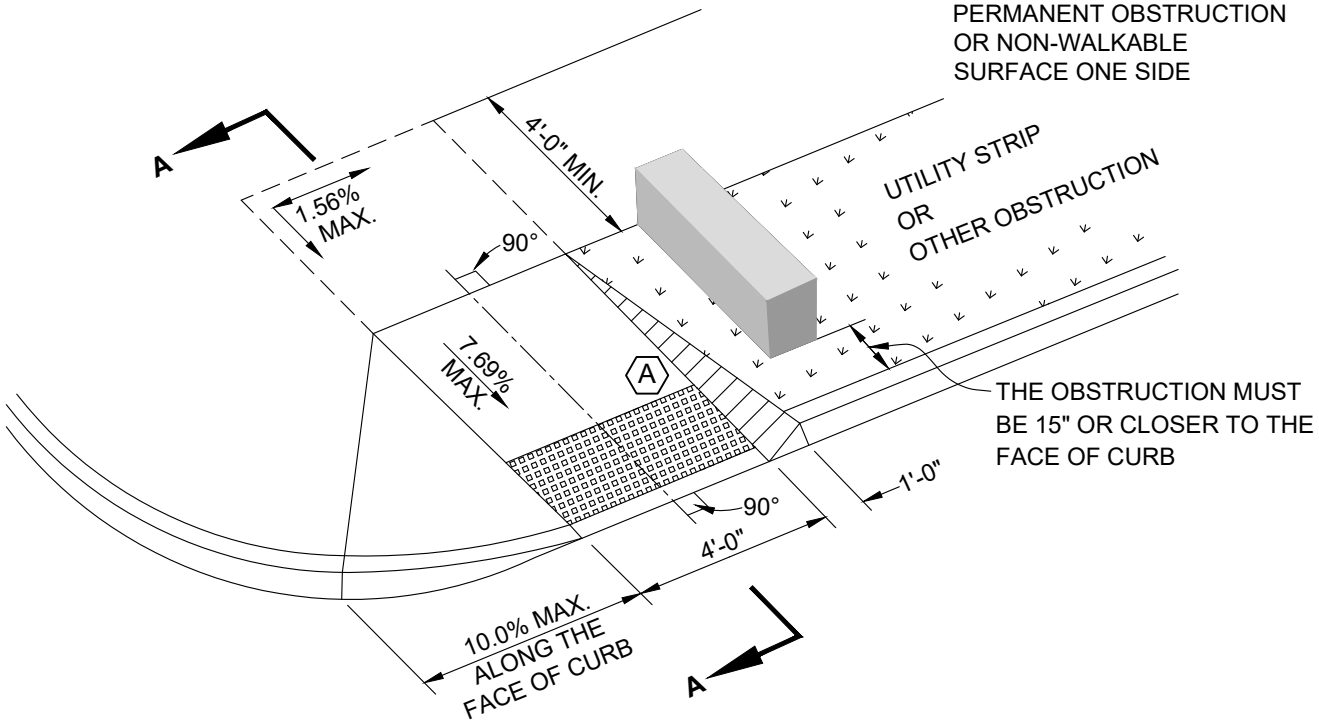

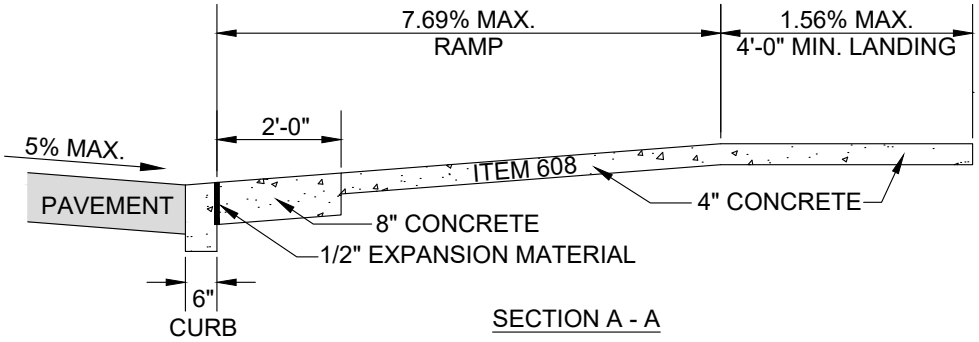

SECTION A - A

CODED NOTES:

(A) SEE SHEET 21 FOR DETECTABLE WARNING DETAILS

GENERAL NOTES:

1. SEE SHEET 2 FOR ADDITIONAL DETAILED INFORMATION.

CURB RAMP TYPE D

CITY OF COLUMBUS, OHIO
DEPARTMENT OF PUBLIC SERVICE
DIVISION OF DESIGN AND CONSTRUCTION

STD DWG
2319

3/30/2018

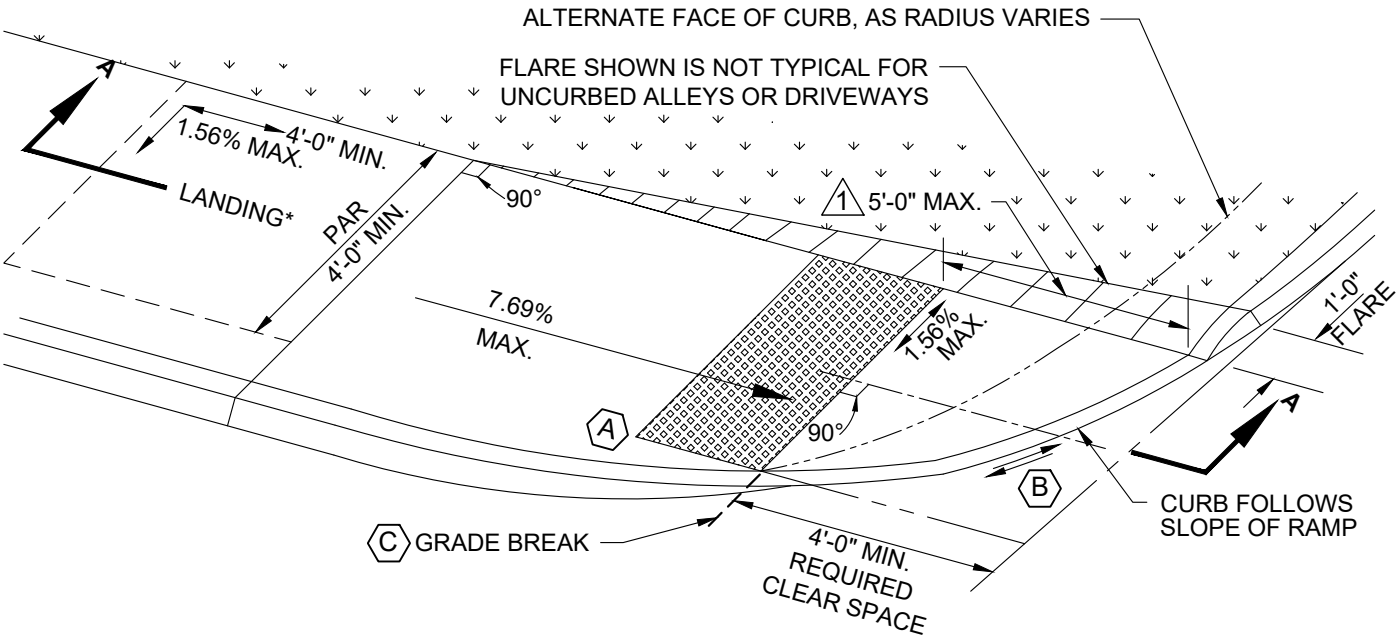

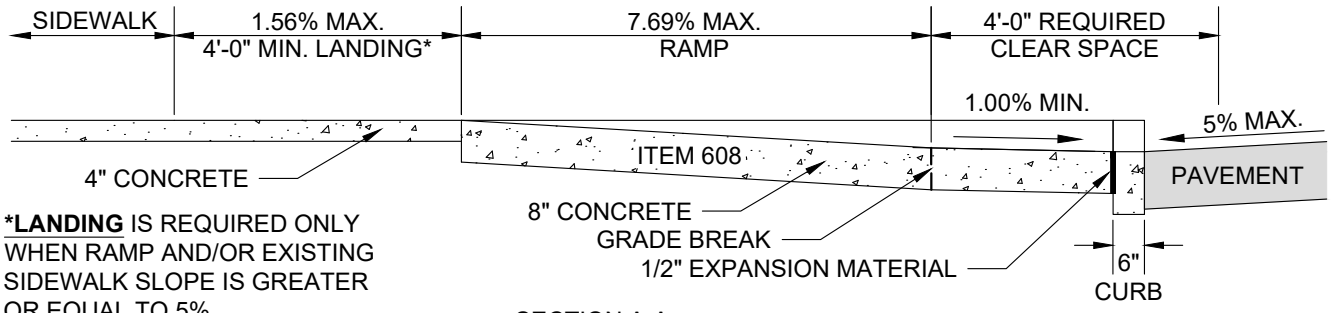

***LANDING** IS REQUIRED ONLY WHEN RAMP AND/OR EXISTING SIDEWALK SLOPE IS GREATER OR EQUAL TO 5%

SECTION A-A

1 DETAIL TO BE USED WHEN DISTANCE FROM BACK OF CURB TO THE GRADE BREAK IS GREATER THAN 5 FT.

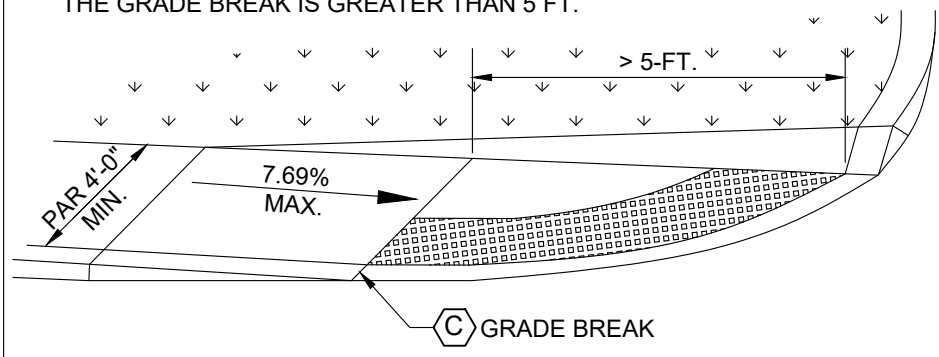

CODED NOTES:

A SEE SHEET 21 FOR DETECTABLE WARNING DETAILS

B PROVIDE POSITIVE DRAINAGE ALONG CURBLINE, SHOULD BE 1.00% MINIMUM SLOPE

C WHERE THE DISTANCE FROM EITHER END OF THE BOTTOM OF THE GRADE BREAK TO THE BACK OF CURB IS GREATER THAN 5-FT, THE DETECTABLE WARNING SHALL BE PLACED AT THE BACK OF CURB

CURB RAMP TYPE G

GENERAL NOTES:

1. SEE SHEET 2 FOR ADDITIONAL DETAILED INFORMATION.
2. THE EDGE OF THE CURB WITHIN THE CLEAR SPACE SHALL BE FLUSH WITH THE EDGE OF THE ADJACENT PAVEMENT AND GUTTER.

CITY OF COLUMBUS, OHIO
DEPARTMENT OF PUBLIC SERVICE
DIVISION OF DESIGN AND CONSTRUCTION

STD DWG
2319

3/30/2018

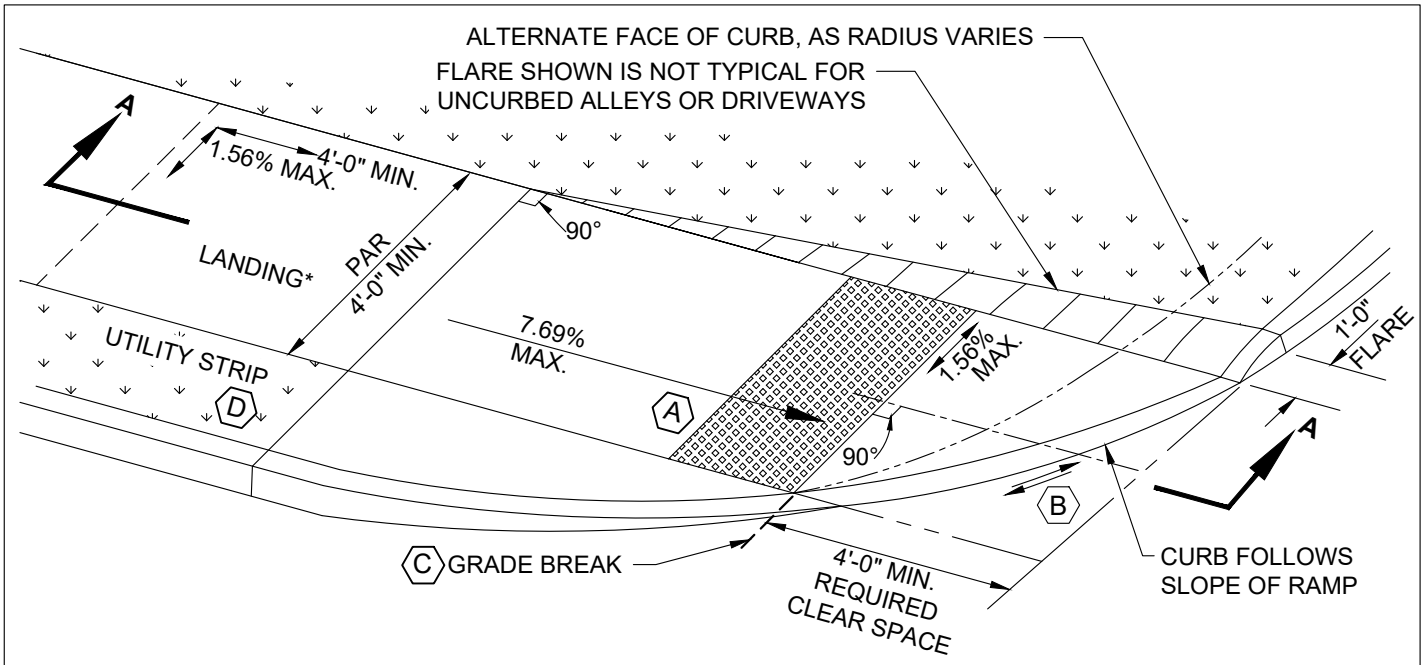

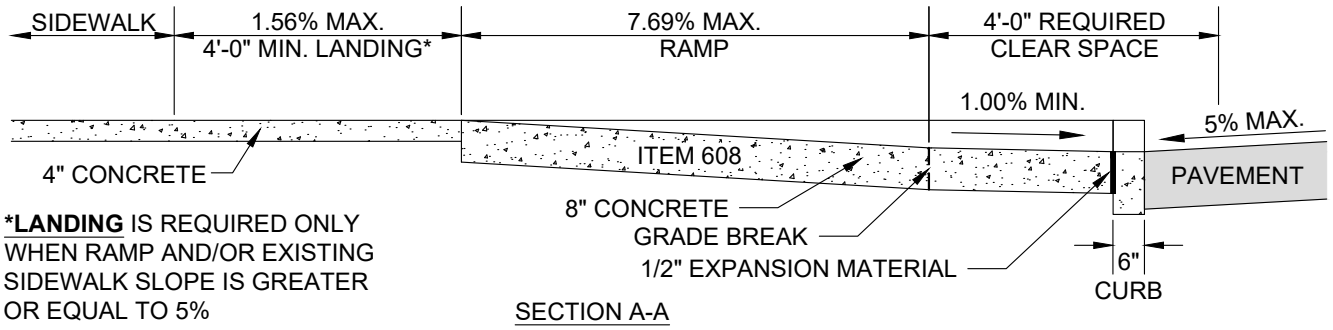

***LANDING** IS REQUIRED ONLY WHEN RAMP AND/OR EXISTING SIDEWALK SLOPE IS GREATER OR EQUAL TO 5%

SECTION A-A

CODED NOTES:

A SEE SHEET 21 FOR DETECTABLE WARNING DETAILS

B PROVIDE POSITIVE DRAINAGE ALONG CURBLINE, SHOULD BE 1.00% MINIMUM SLOPE

C WHERE THE DISTANCE FROM EITHER END OF THE BOTTOM OF THE GRADE BREAK TO THE BACK OF CURB IS GREATER THAN 5-FT, THE DETECTABLE WARNING SHALL BE PLACED AT THE BACK OF CURB

D FOR THE LENGTH OF THE RAMP, THE UTILITY STRIP MAY BE REMOVED AND REPLACED WITH 8" CONCRETE (ITEM 608), PROVIDED THE UTILITY STRIP IS NO WIDER THAN 2-FT

GENERAL NOTES:

1. SEE SHEET 2 FOR ADDITIONAL DETAILED INFORMATION.
2. THE EDGE OF THE CURB WITHIN THE CLEAR SPACE SHALL BE FLUSH WITH THE EDGE OF THE ADJACENT PAVEMENT AND GUTTER.

CURB RAMP TYPE H

CITY OF COLUMBUS, OHIO
DEPARTMENT OF PUBLIC SERVICE
DIVISION OF DESIGN AND CONSTRUCTION

STD DWG
2319

3/30/2018

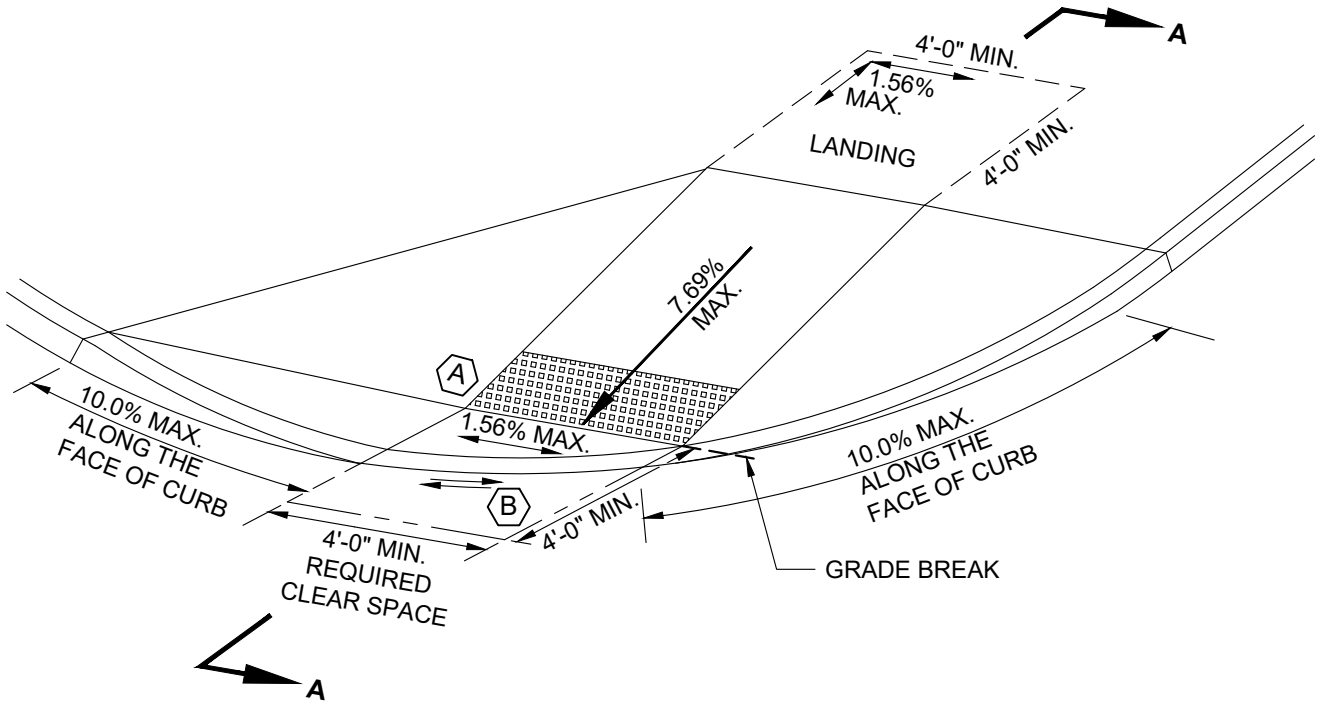

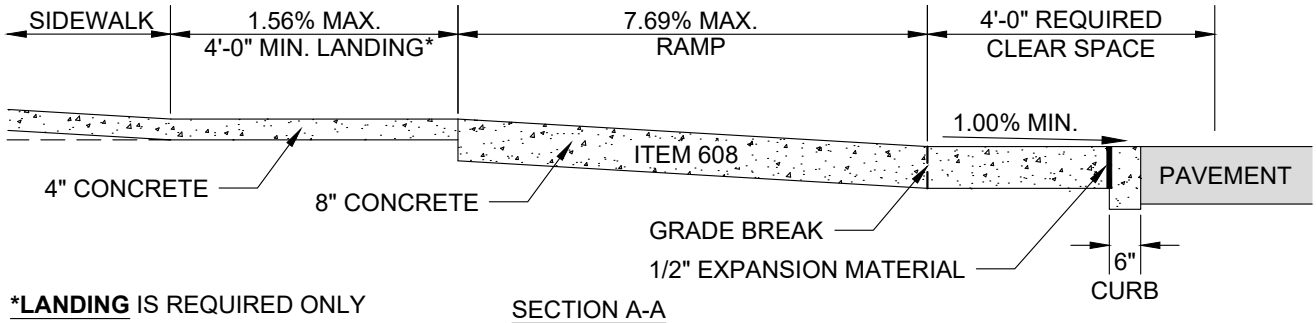

SECTION A-A

***LANDING** IS REQUIRED ONLY WHEN RAMP AND/OR EXISTING SIDEWALK SLOPE IS GREATER OR EQUAL TO 5%

CODED NOTES:

(A) SEE SHEET 21 FOR DETECTABLE WARNING DETAILS

(B) PROVIDE POSITIVE DRAINAGE ALONG CURBLINE, SHOULD BE 1.00% MINIMUM SLOPE

GENERAL NOTES:

1. SEE SHEET 2 FOR ADDITIONAL DETAILED INFORMATION.
2. THE EDGE OF THE CURB WITHIN THE CLEAR SPACE SHALL BE FLUSH WITH THE EDGE OF THE ADJACENT PAVEMENT AND GUTTER.

CURB RAMP TYPE J

CITY OF COLUMBUS, OHIO
DEPARTMENT OF PUBLIC SERVICE
DIVISION OF DESIGN AND CONSTRUCTION

STD DWG
2319

3/30/2018

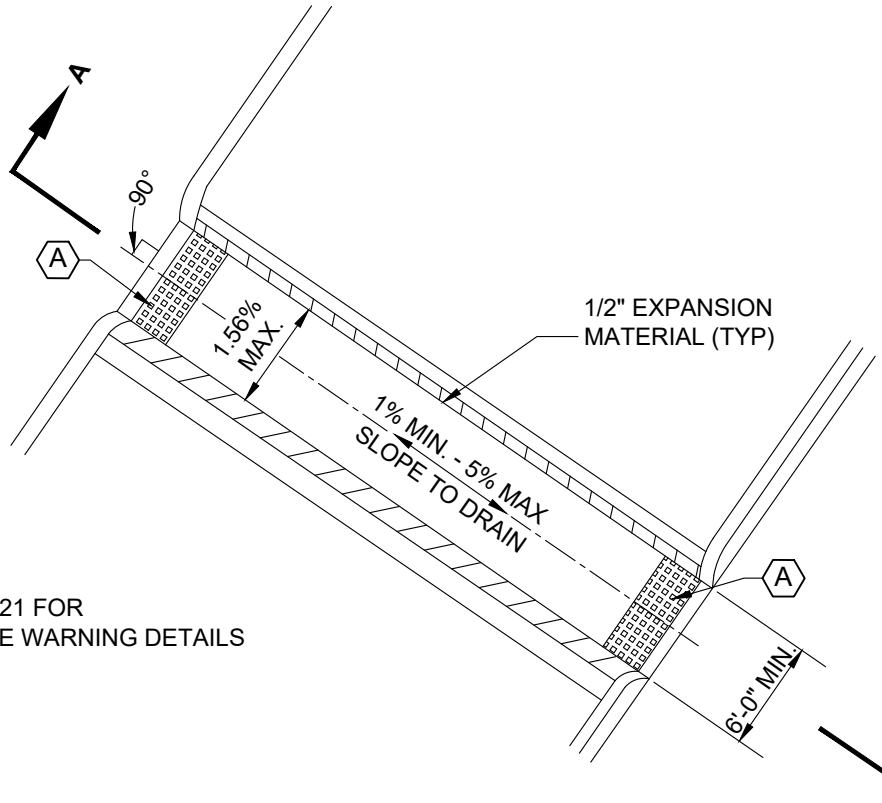

CODED NOTES:

(A) SEE SHEET 21 FOR DETECTABLE WARNING DETAILS

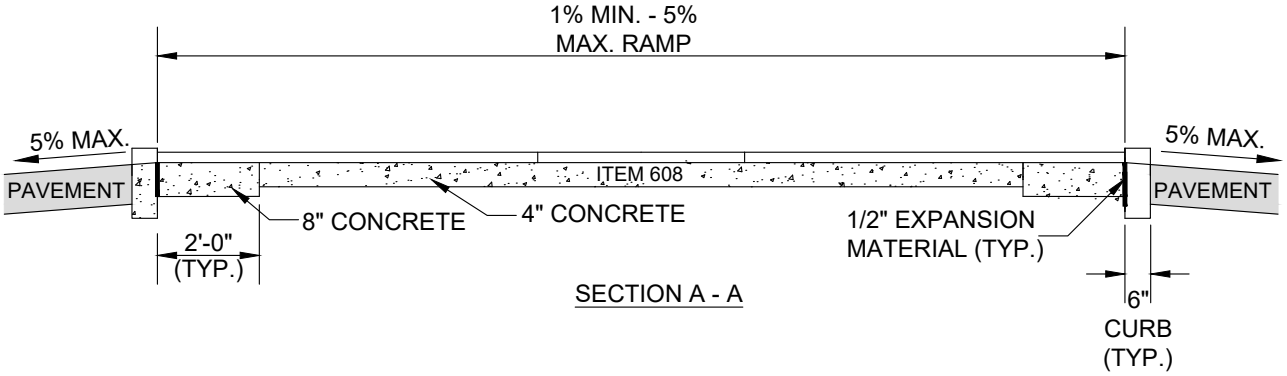

SECTION A - A

GENERAL NOTES:

1. SEE SHEET 2 FOR ADDITIONAL DETAILED INFORMATION.
2. RAMP L-1 SHALL BE USED IN ALL CIRCUMSTANCES WHERE NOT PROHIBITED BY DRAINAGE ISSUES. AN L-1 RAMP SHOULD NOT BE PLACED IN A WAY THAT WOULD CONVEY THE CURB FLOW OF WATER THROUGH THE MEDIAN PASSTHROUGH. WHERE THE ROADWAY CROSS-SLOPE DIRECTS WATER TOWARDS THE MEDIAN AND FLOWS THROUGH THE GUTTER LINE ADJACENT TO THE PASSTHROUGH, USE AN L-2 RAMP.
3. MEDIANS / ISLANDS WITHIN COMMERCIAL DRIVES REQUIRE DETECTABLE WARNINGS ONLY WHEN OPPOSING CURB RAMPS REQUIRE DETECTABLE WARNINGS. (SEE SHEET 21 OF 21, NOTE 1)

CURB RAMP TYPE L-1

CITY OF COLUMBUS, OHIO
DEPARTMENT OF PUBLIC SERVICE
DIVISION OF DESIGN AND CONSTRUCTION

STD DWG
2319

3/30/2018

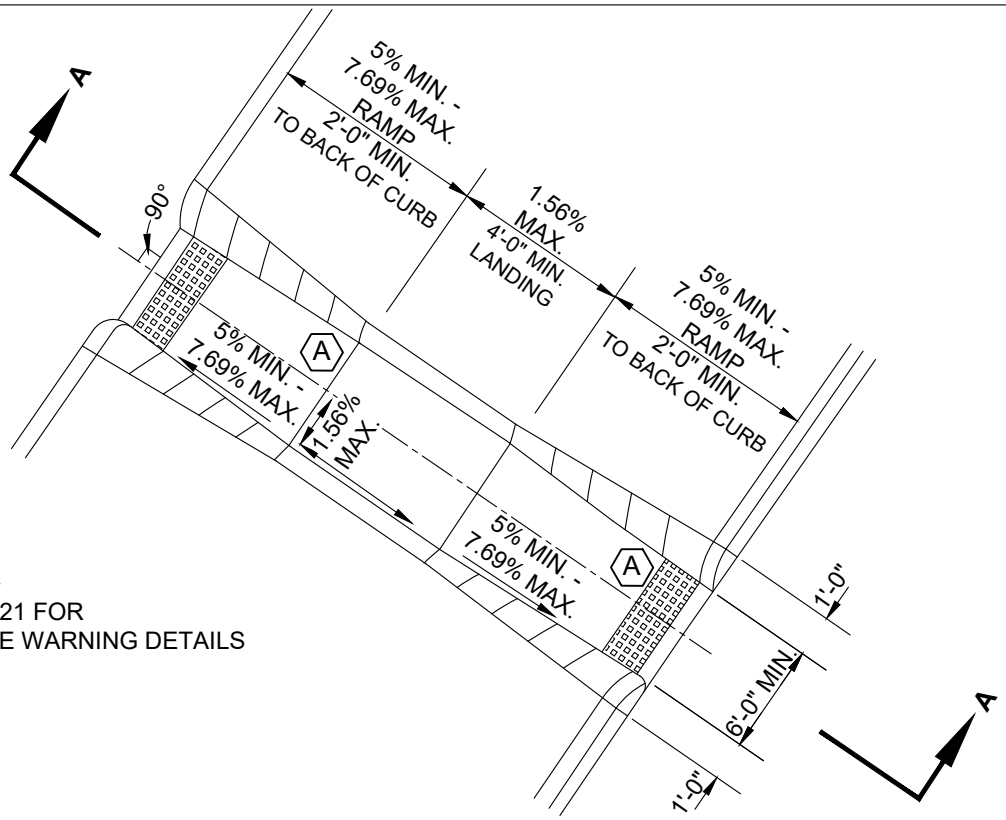

CODED NOTES:

(A) SEE SHEET 21 FOR DETECTABLE WARNING DETAILS

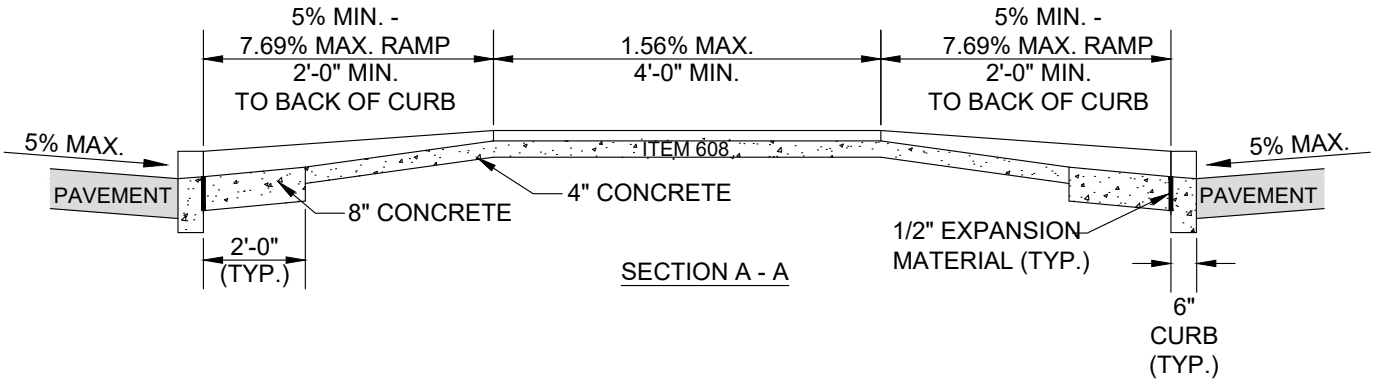

GENERAL NOTES:

1. SEE SHEET 2 FOR ADDITIONAL DETAILED INFORMATION.
2. MEDIANS / ISLANDS WITHIN COMMERCIAL DRIVES REQUIRE DETECTABLE WARNINGS ONLY WHEN OPPOSING CURB RAMPS REQUIRE DETECTABLE WARNINGS. (SEE SHEET 21 OF 21, NOTE 1).
3. TYPE L-2 RAMPS ARE ONLY TO BE INSTALLED WHEN IT IS NOT POSSIBLE TO INSTALL A TYPE L-1 RAMP DUE TO DRAINAGE ISSUES.
4. TYPE L-2 RAMPS CAN ONLY BE USED ON MEDIANS 8 FEET WIDE OR MORE.

CURB RAMP TYPE L-2

CITY OF COLUMBUS, OHIO
DEPARTMENT OF PUBLIC SERVICE
DIVISION OF DESIGN AND CONSTRUCTION

STD DWG
2319

3/30/2018

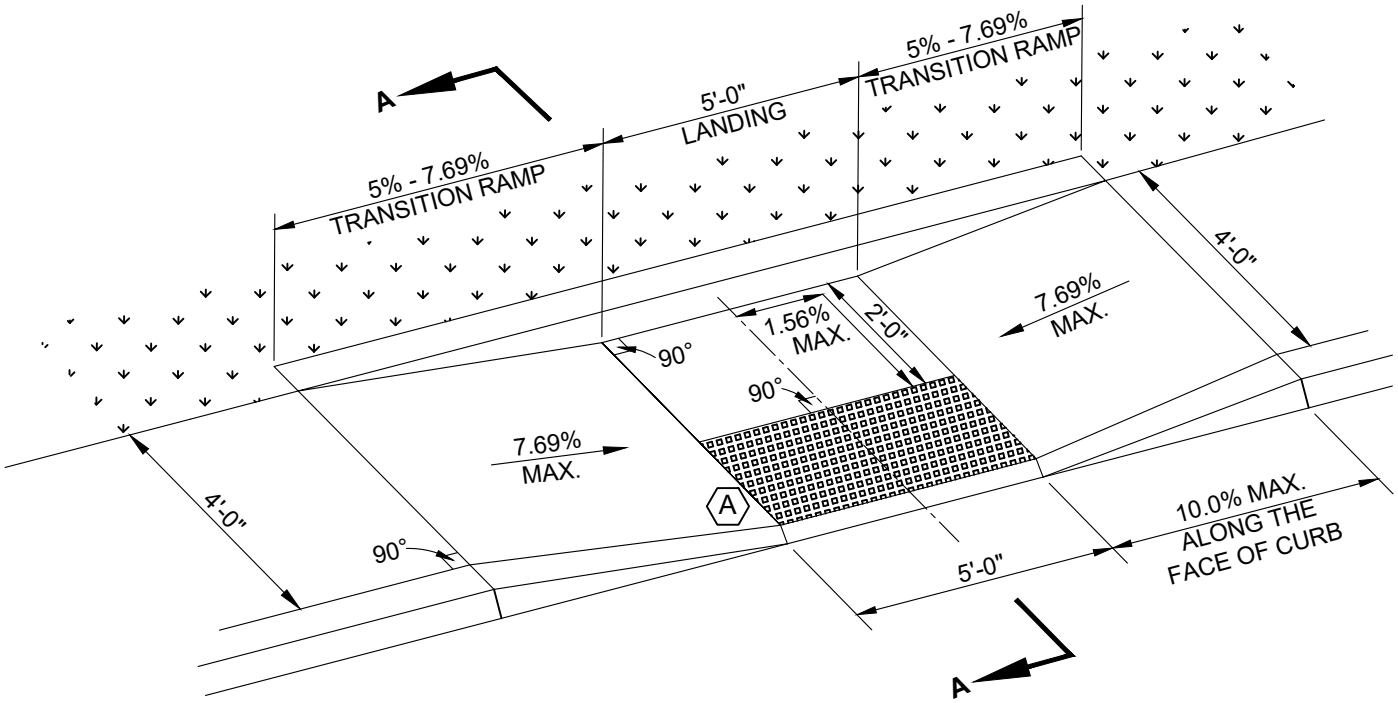

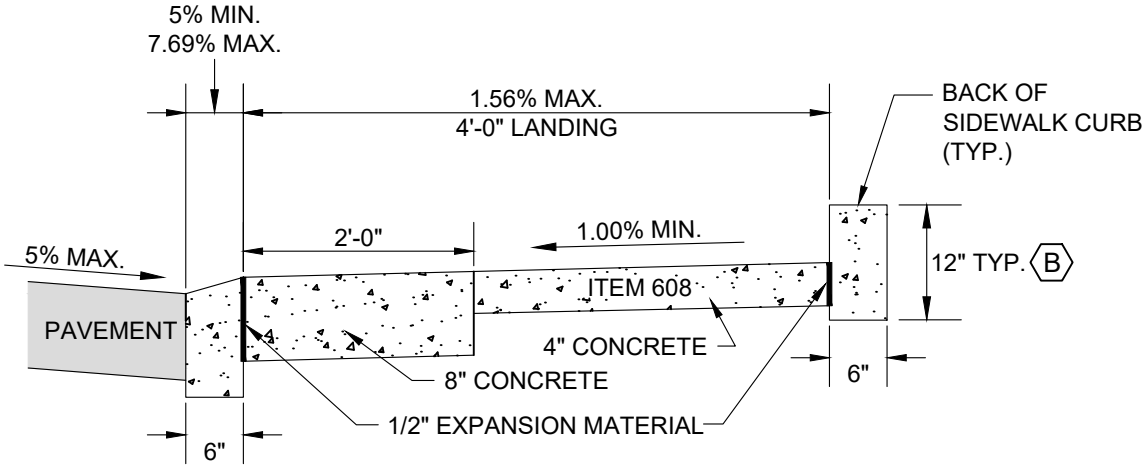

SECTION A-A

CODED NOTES:

A SEE SHEET 21 FOR DETECTABLE WARNING DETAILS

B EXPOSED REVEAL MUST EQUAL BURIED DEPTH; 12" MAXIMUM REVEAL; FOR ADDITIONAL DETAILS SEE CURB WALL SPECIFICATION

GENERAL NOTES:

1. SEE SHEET 2 FOR ADDITIONAL DETAILED INFORMATION.

CURB RAMP TYPE P-4

CITY OF COLUMBUS, OHIO
DEPARTMENT OF PUBLIC SERVICE
DIVISION OF DESIGN AND CONSTRUCTION

STD DWG
2319

3/30/2018

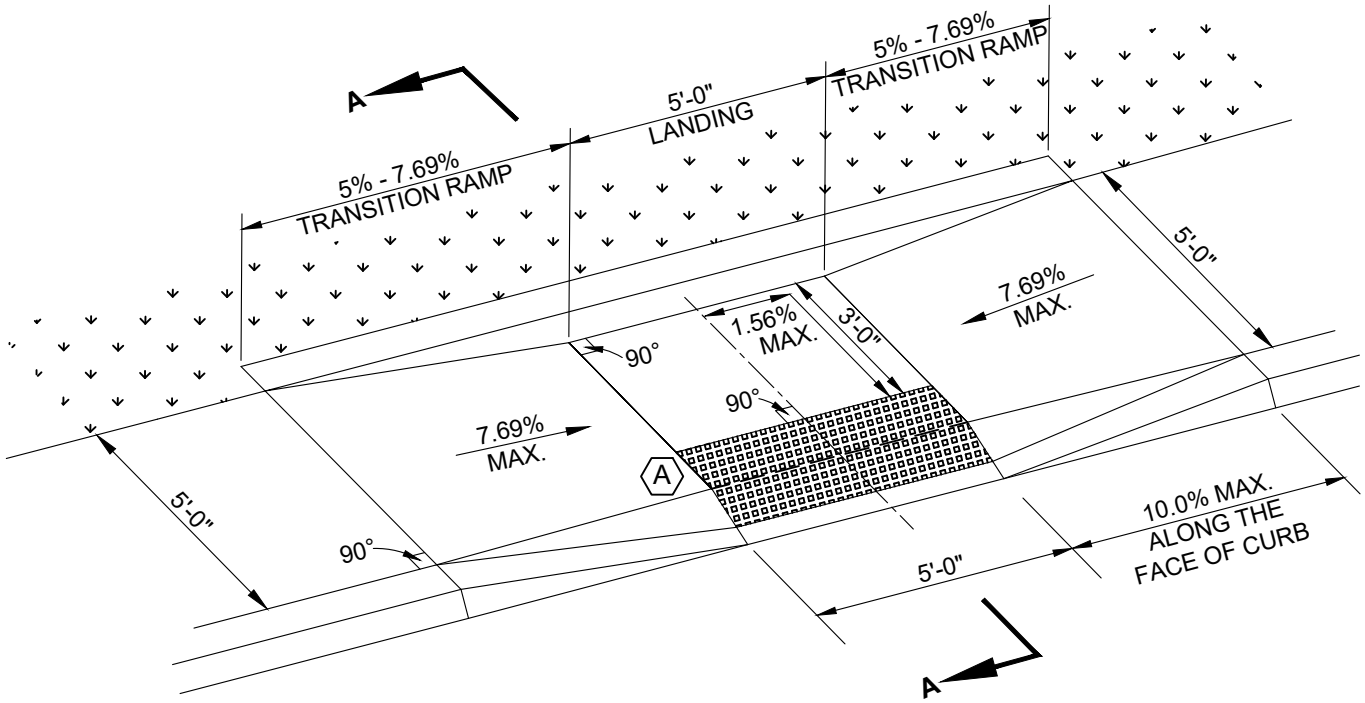

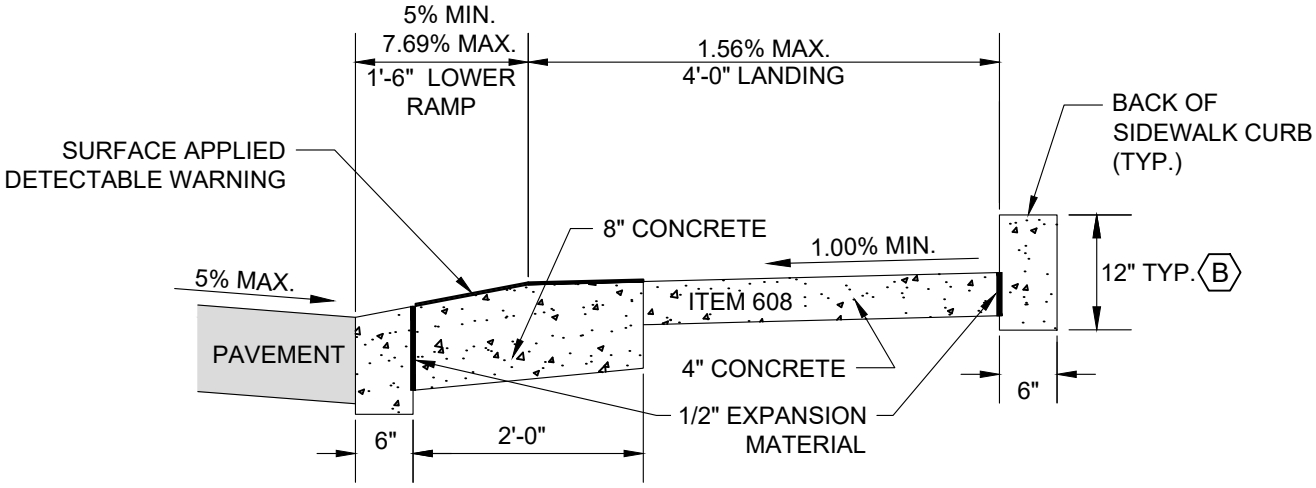

SECTION A-A

CODED NOTES:

A SEE SHEET 21 FOR DETECTABLE WARNING DETAILS

B EXPOSED REVEAL MUST EQUAL BURIED DEPTH; 12" MAXIMUM REVEAL; FOR ADDITIONAL DETAILS SEE CURB WALL SPECIFICATION

GENERAL NOTES:

1. SEE SHEET 2 FOR ADDITIONAL DETAILED INFORMATION.

CURB RAMP TYPE P-5

CITY OF COLUMBUS, OHIO
DEPARTMENT OF PUBLIC SERVICE
DIVISION OF DESIGN AND CONSTRUCTION

STD DWG
2319

3/30/2018

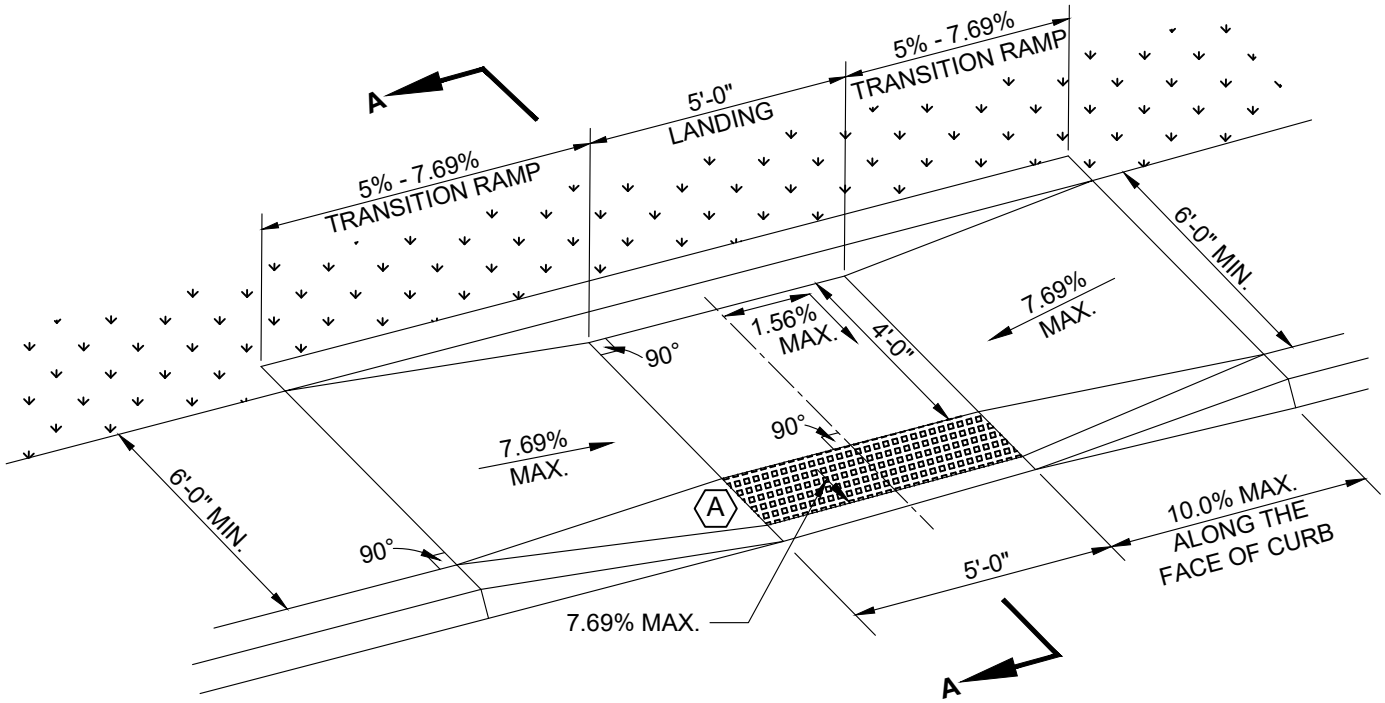

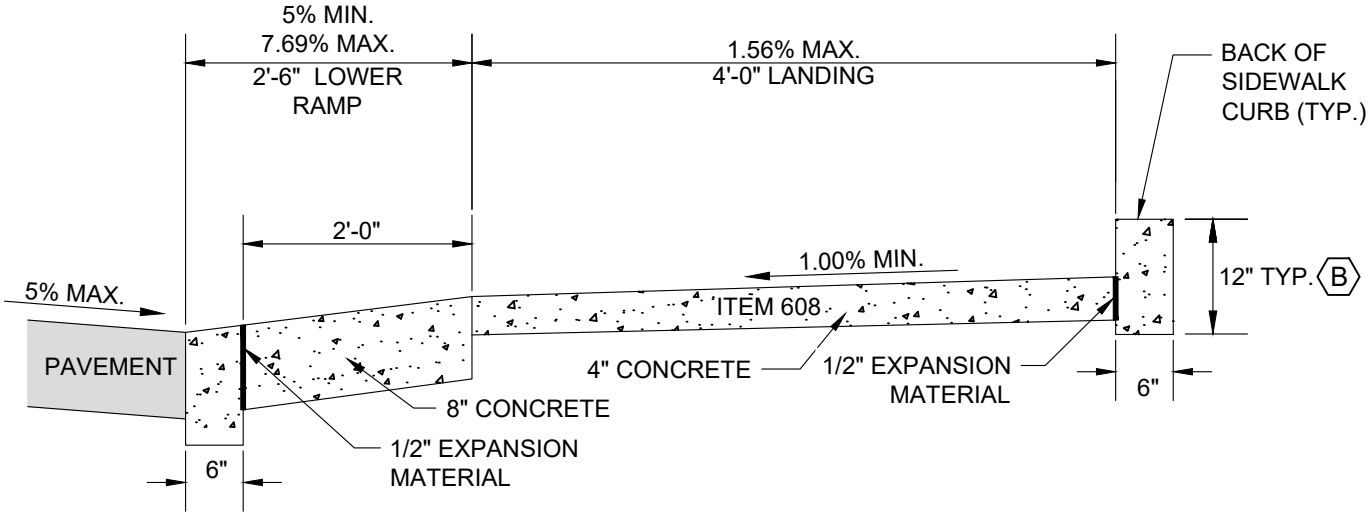

SECTION A-A

CODED NOTES:

A SEE SHEET 21 FOR DETECTABLE WARNING DETAILS

B EXPOSED REVEAL MUST EQUAL BURIED DEPTH; 12" MAXIMUM REVEAL; FOR ADDITIONAL DETAILS SEE CURB WALL SPECIFICATION

GENERAL NOTES:

1. SEE SHEET 2 FOR ADDITIONAL DETAILED INFORMATION.

CURB RAMP TYPE P-6

CITY OF COLUMBUS, OHIO
DEPARTMENT OF PUBLIC SERVICE
DIVISION OF DESIGN AND CONSTRUCTION

STD DWG
2319

3/30/2018

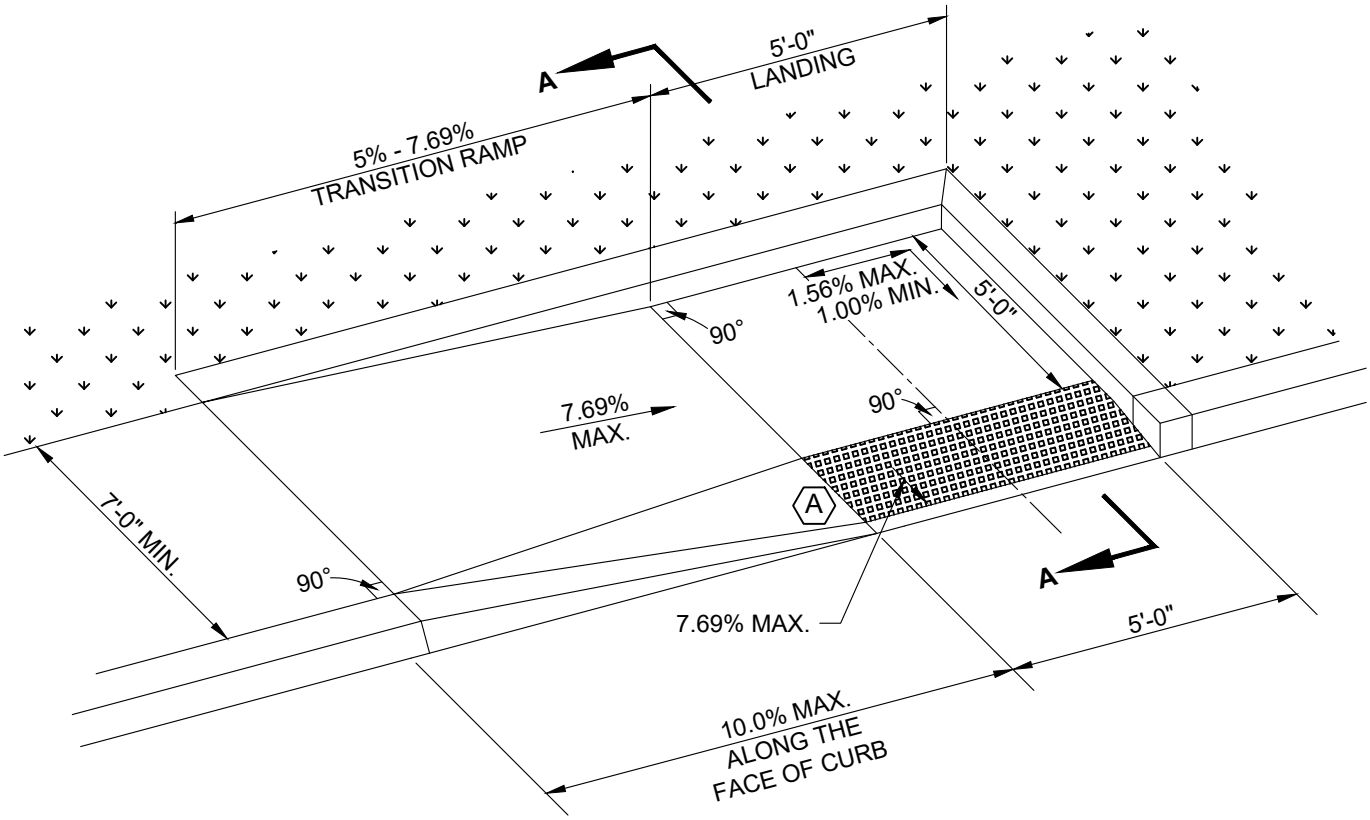

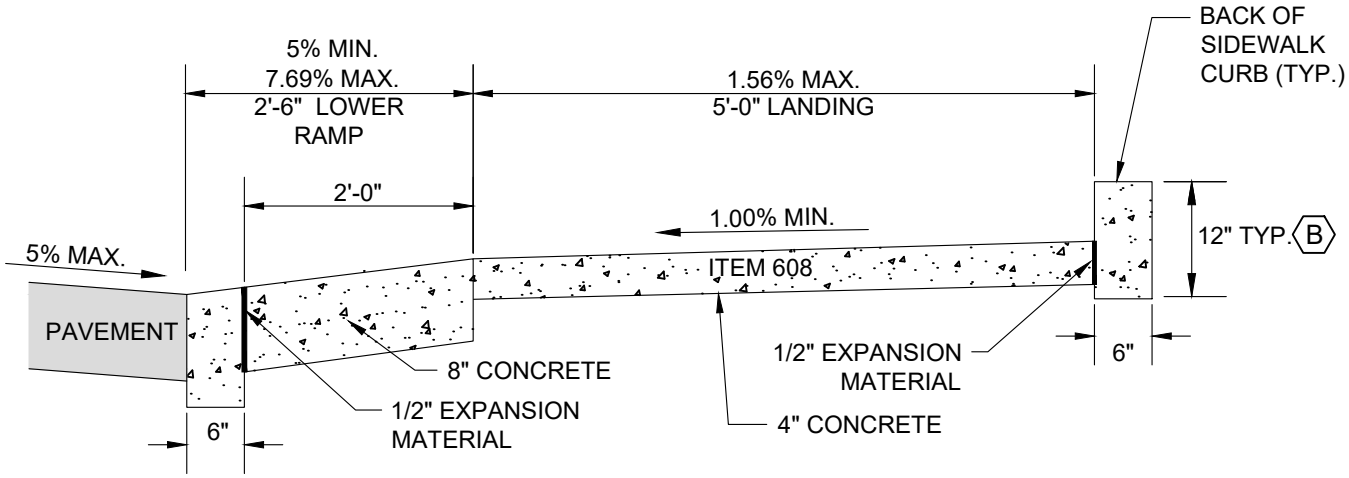

SECTION A-A

CODED NOTES:

A SEE SHEET 21 FOR DETECTABLE WARNING DETAILS

B EXPOSED REVEAL MUST EQUAL BURIED DEPTH; 12" MAXIMUM REVEAL; FOR ADDITIONAL DETAILS SEE CURB WALL SPECIFICATION

GENERAL NOTES:

1. SEE SHEET 2 FOR ADDITIONAL DETAILED INFORMATION.

CURB RAMP TYPE P-7

CITY OF COLUMBUS, OHIO
DEPARTMENT OF PUBLIC SERVICE
TRANSPORTATION DIVISION

STD DWG
2319

3/30/2018

PEDESTRIAN PAD (PP)
TYPE 1 CONDITION-CONNECTED SEPARATED FROM CURB

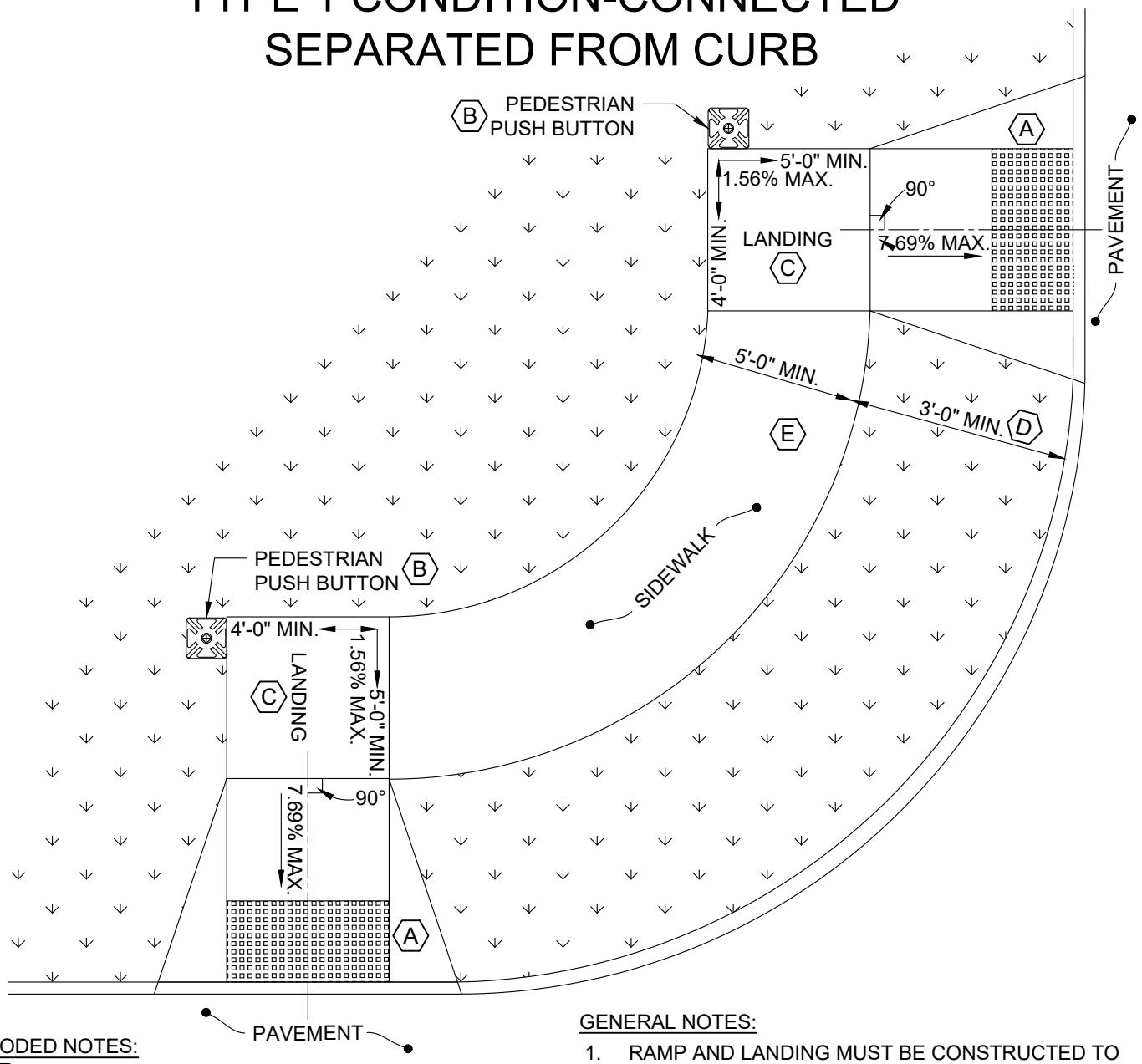

CODED NOTES:

A USE 1-FT FLARES ON CURBED ROADWAY. ON UNCURBED ROADWAY RAMP SHALL BE CONSTRUCTED WITHOUT FLARES, SEE STANDARD DRAWING FOR DETECTABLE WARNING PLACEMENT DETAILS. THE FRONT TWO FEET OF THE RAMP AND FLARES SHALL BE CONSTRUCTED USING CONCRETE 8" THICK AND TRANSITIONING TO 4" CONCRETE FURTHER THAN 2 FEET FROM THE BACK OF THE CURB

B ORIENTATION/LOCATION OF PUSH BUTTON/PEDESTAL TO BE PER POLICY

C LANDING SHALL BE 5-FT BY 5-FT WHEN SURROUNDED BY CURB WALL, AND THE PEDESTRIAN PUSH BUTTON SHALL BE INTEGRAL WITH THE CURB WALL

D IF UTILITY STRIP IS LESS THAN 3-FT, SIDEWALK SHALL BE CONSTRUCTED ADJACENT TO CURB, SEE PP-2

E SIDEWALK WIDTH AND LANDING DEPTH MAY BE REDUCED TO 4' DUE TO CONSTRAINTS.

GENERAL NOTES:

1. RAMP AND LANDING MUST BE CONSTRUCTED TO DRAIN, TYPICALLY TOWARDS THE ROADWAY, BUT MAY VARY BASED ON EXISTING TOPOGRAPHY. WEEP HOLES ARE NOT PERMITTED FOR DRAINAGE.
2. SEE SHEET 2 FOR ADDITIONAL DETAILED INFORMATION.

CURB RAMP
TYPE PP-1

CITY OF COLUMBUS, OHIO
DEPARTMENT OF PUBLIC SERVICE
DIVISION OF DESIGN AND CONSTRUCTION

STD DWG
2319

3/30/2018

PEDESTRIAN PAD (PP)
TYPE 2 CONDITION-CONNECTED
ADJACENT TO CURB

GENERAL NOTES:

1. RAMP AND LANDING MUST BE CONSTRUCTED TO DRAIN, TYPICALLY TOWARDS THE ROADWAY, BUT MAY VARY BASED ON EXISTING TOPOGRAPHY. WEEP HOLES ARE NOT PERMITTED FOR DRAINAGE.
2. SEE SHEET 2 FOR ADDITIONAL DETAILED INFORMATION.

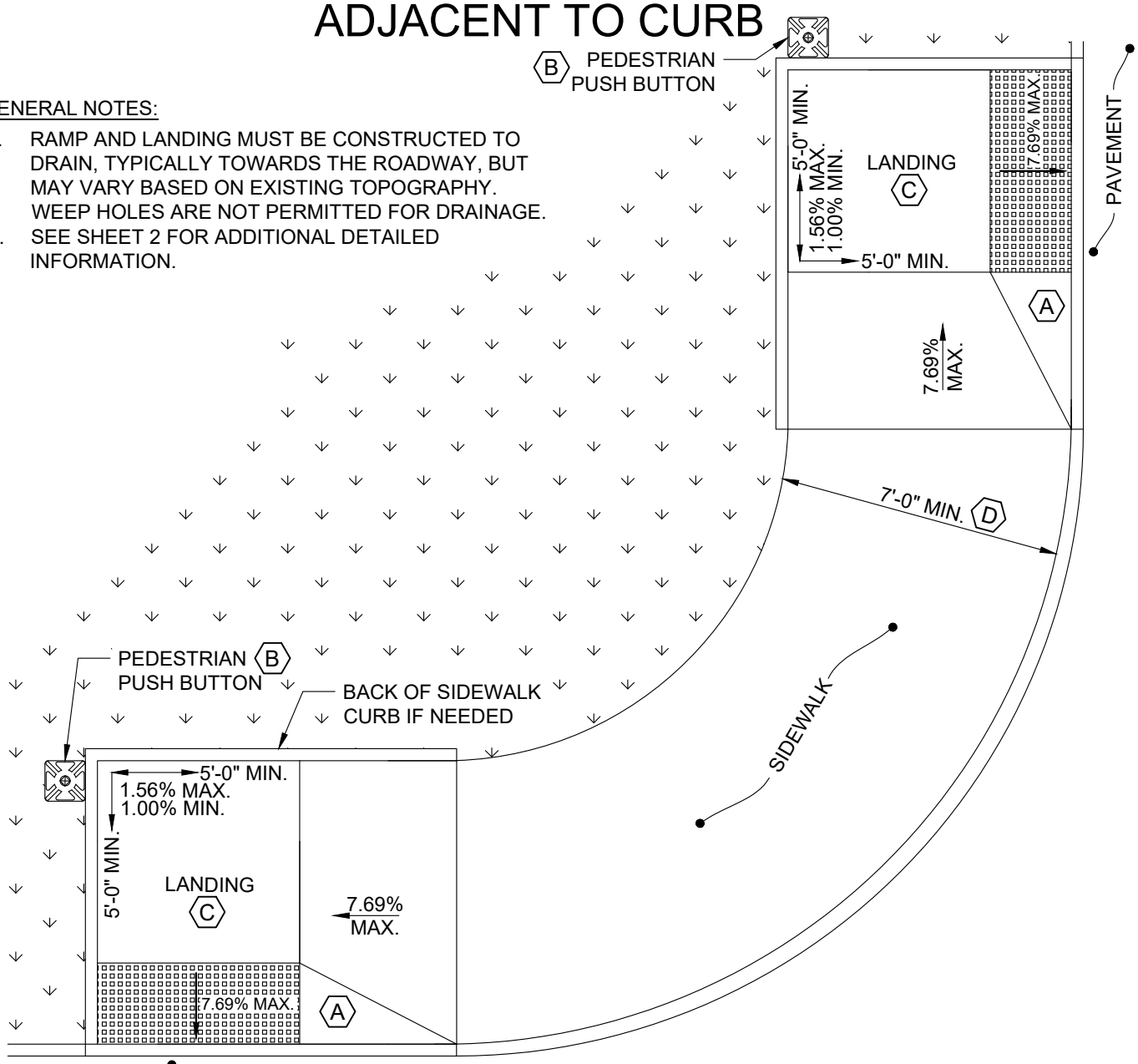

CODED NOTES:

A SEE SHEET 21 FOR DETECTABLE WARNING DETAILS. THE FRONT TWO FEET OF THE RAMP AND FLARES SHALL BE CONSTRUCTED USING CONCRETE 8" THICK AND TRANSITIONING TO 4" CONCRETE FURTHER THAN 2 FEET FROM THE BACK OF THE CURB

B ORIENTATION/LOCATION OF PUSH BUTTON/PEDESTAL TO BE PER POLICY

C WIDTH OF THE RAMP AND LANDING MAY BE REDUCED TO 4-FT WHERE NO CURB WALL IS PRESENT

D SIDEWALK WIDTH MAY BE REDUCED TO 5-FT MIN. WHEN CONSTRAINED. SEE RAMP TYPE P-4, SECTION A-A FOR RAMP AND LANDING

CURB RAMP
TYPE PP-2

CITY OF COLUMBUS, OHIO
DEPARTMENT OF PUBLIC SERVICE
DIVISION OF DESIGN AND CONSTRUCTION

STD DWG
2319

3/30/2018

PEDESTRIAN PAD (PP)
TYPE 3 CONDITION-SHARED
CURB IS PRESENT

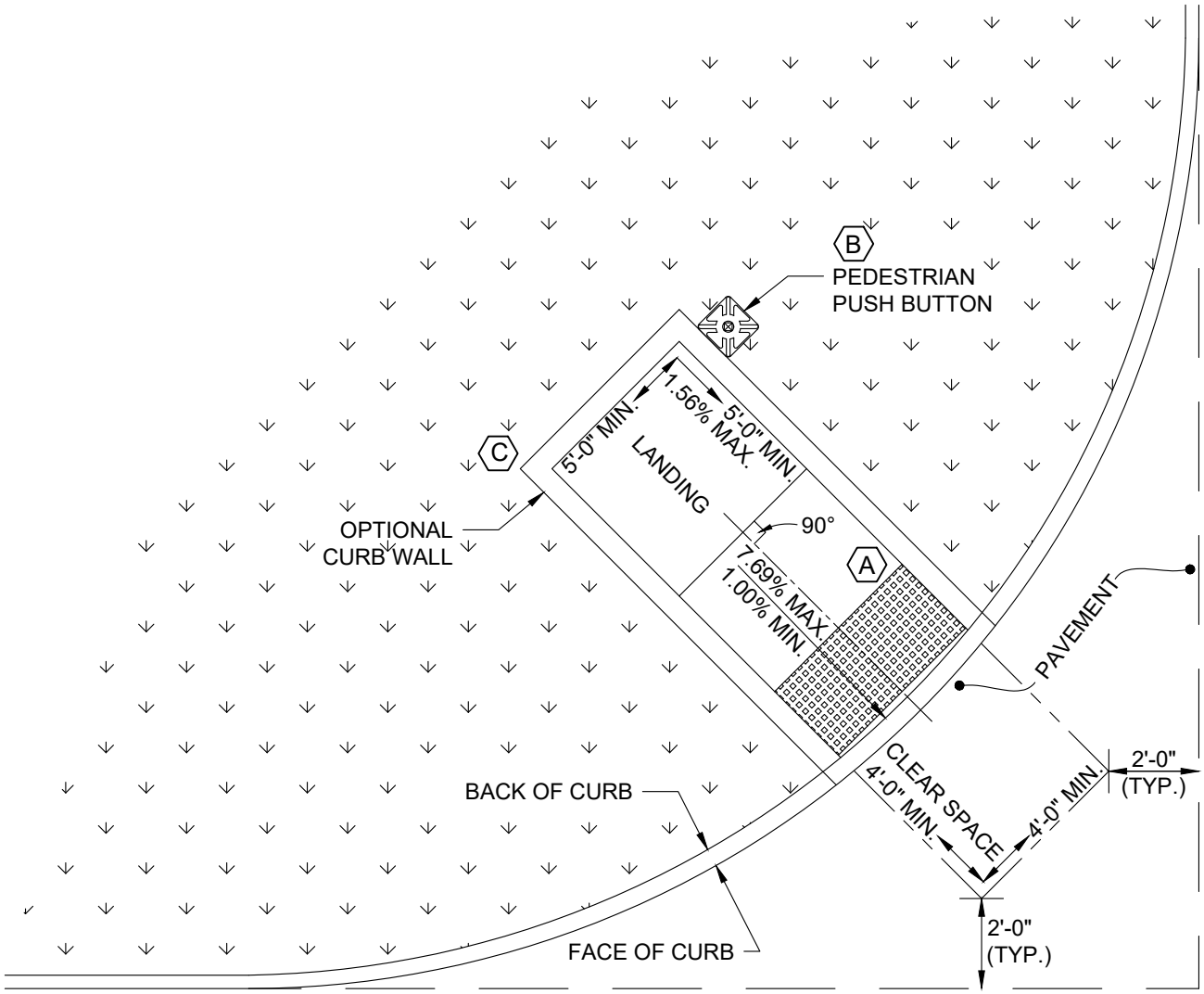

CODED NOTES:

(A) SEE SHEET 21 FOR DETECTABLE WARNING DETAILS. THE FRONT TWO FEET OF THE RAMP AND FLARES SHALL BE CONSTRUCTED USING CONCRETE 8" THICK AND TRANSITIONING TO 4" CONCRETE FURTHER THAN 2 FEET FROM THE BACK OF THE CURB

(B) ORIENTATION/LOCATION OF PUSH BUTTON/PEDESTAL TO BE PER POLICY

(C) CURB WALL MAY BE NECESSARY BASED ON EXISTING TOPOGRAPHY. IF CURB WALL IS NOT CONSTRUCTED, THE LANDING WIDTH CAN BE REDUCED TO 4'x4'.

GENERAL NOTES:

1. RAMP AND LANDING MUST BE CONSTRUCTED TO DRAIN, TYPICALLY TOWARDS THE ROADWAY, BUT MAY VARY BASED ON EXISTING TOPOGRAPHY. WEEP HOLES ARE NOT PERMITTED FOR DRAINAGE.
2. SEE SHEET 2 FOR ADDITIONAL DETAILED INFORMATION.

CURB RAMP
TYPE PP-3

CITY OF COLUMBUS, OHIO
DEPARTMENT OF PUBLIC SERVICE
DIVISION OF DESIGN AND CONSTRUCTION

STD DWG
2319

3/30/2018

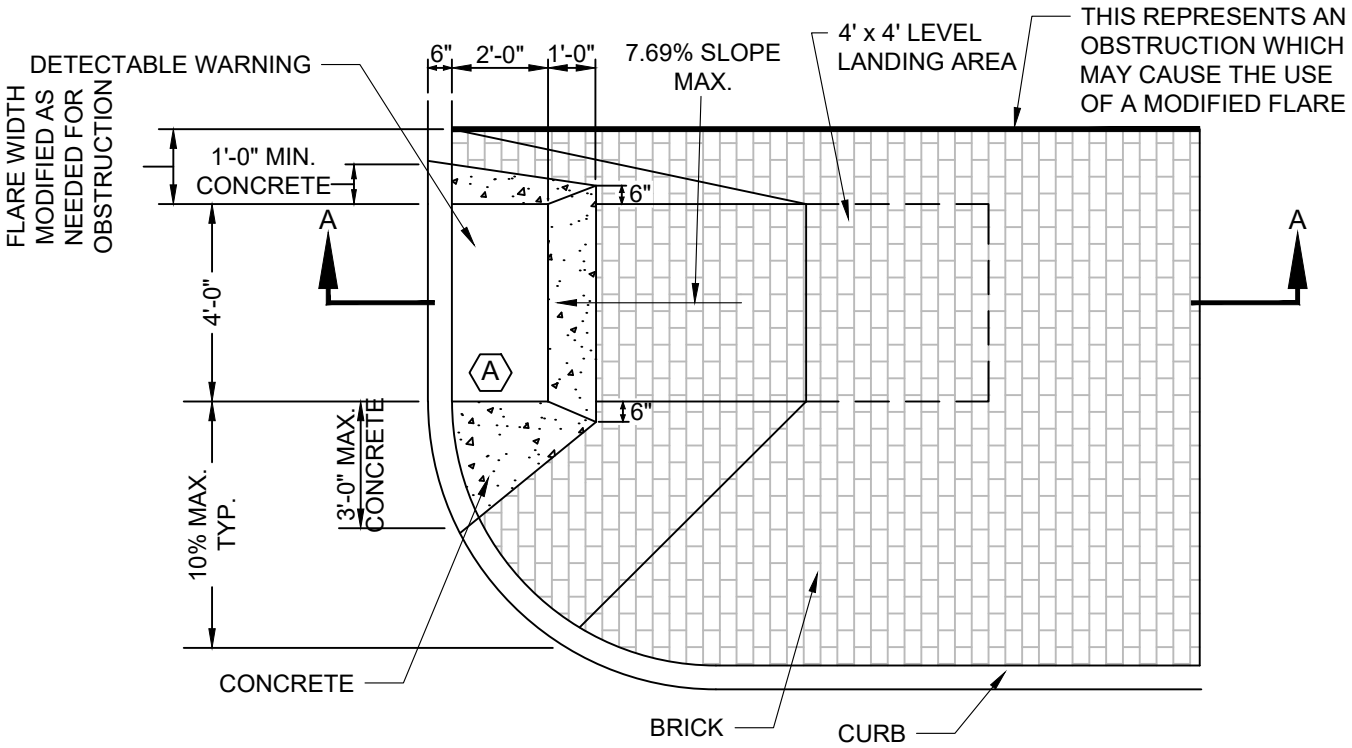

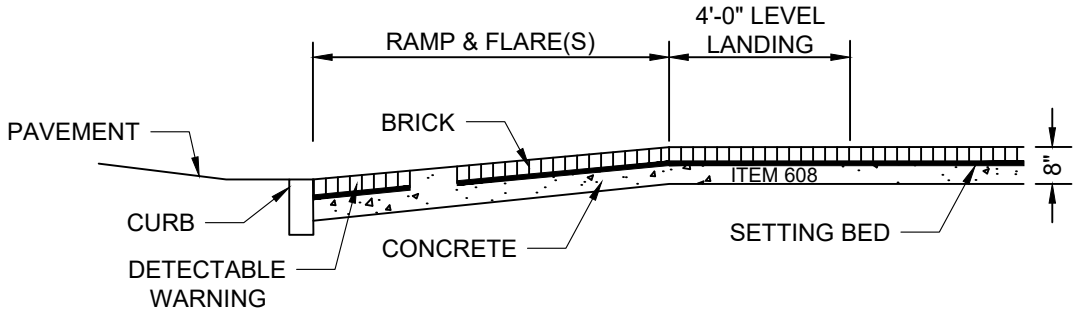

SECTION A-A

1. WRITTEN APPROVAL FROM THE CITY ENGINEER OR AN AUTHORIZED REPRESENTATIVE SHALL BE OBTAINED PRIOR TO THE DESIGN OR CONSTRUCTION OF GRANITE OR AN ALTERNATE MATERIAL CURB RAMP.
2. ALONG WITH THE REQUIREMENT OF THIS SHEET FOR BRICK OR GRANITE CURB RAMPS, ALL OTHER APPLICABLE REQUIREMENTS OF 2319 SHALL BE FOLLOWED.
3. BRICK OR GRANITE CURB RAMPS SHALL BE TYPED PER 2319. TYPICALLY TYPE A OR TYPE D WILL BE USED. ALL APPLICABLE DIMENSIONS AND REQUIREMENTS FOR THE SELECTED TYPE OF RAMP SHALL BE FOLLOWED.
4. LONG FLARES WILL BE USED WHEREVER POSSIBLE. A MODIFIED FLARE SHALL BE USED WHEN AN OBSTRUCTION EXISTS.
5. THE INSTALLATION OF THE BRICK OR GRANITE PAVERS SHALL BE DONE PER STD DWG 2301, BRICK SIDEWALK.

CODED NOTES:

(A) SEE SHEET 21 FOR DETECTABLE WARNING DETAILS

PERPENDICULAR CURB RAMP BRICK SIDEWALK

CITY OF COLUMBUS, OHIO
DEPARTMENT OF PUBLIC SERVICE
DIVISION OF DESIGN AND CONSTRUCTION

STD DWG
2319

3/30/2018

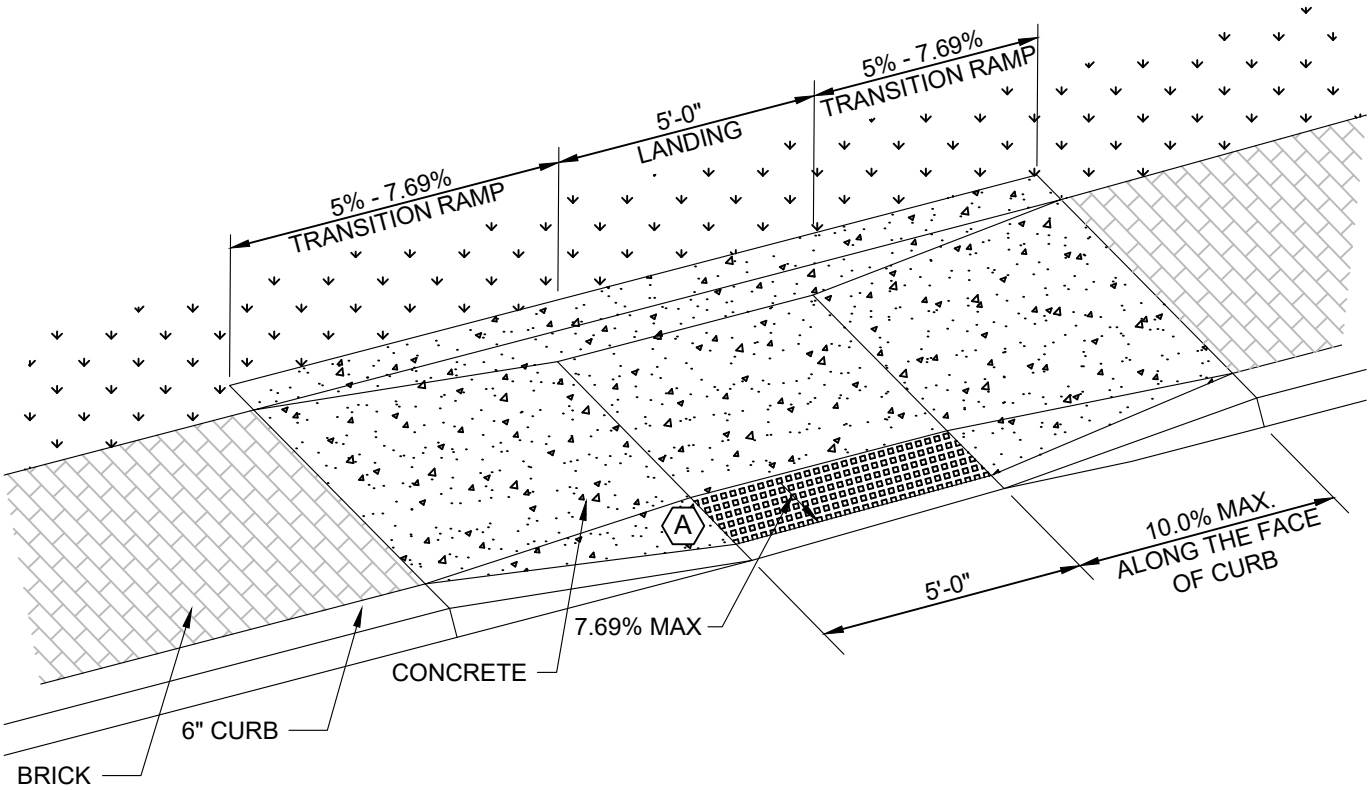

1. WRITTEN APPROVAL FROM THE CITY ENGINEER OR AN AUTHORIZED REPRESENTATIVE SHALL BE OBTAINED PRIOR TO THE DESIGN OR CONSTRUCTION OF GRANITE OR AN ALTERNATE MATERIAL CURB RAMP.
2. ALONG WITH THE REQUIREMENT OF THIS SHEET FOR BRICK OR GRANITE CURB RAMPS, ALL OTHER APPLICABLE REQUIREMENTS OF 2319 SHALL BE FOLLOWED.
3. BRICK OR GRANITE CURB RAMPS SHALL BE TYPED PER 2319. TYPICALLY TYPE A OR TYPE D WILL BE USED. ALL APPLICABLE DIMENSIONS AND REQUIREMENTS FOR THE SELECTED TYPE OF RAMP SHALL BE FOLLOWED.
4. LONG FLARES WILL BE USED WHEREVER POSSIBLE. A MODIFIED FLARE SHALL BE USED WHEN AN OBSTRUCTION EXISTS.
5. THE INSTALLATION OF THE BRICK OR GRANITE PAVERS SHALL BE DONE PER STD DWG 2301, BRICK SIDEWALK.

CODED NOTES:

(A) SEE SHEET 21 FOR DETECTABLE WARNING DETAILS

PARALLEL CURB RAMP BRICK SIDEWALK

CITY OF COLUMBUS, OHIO
DEPARTMENT OF PUBLIC SERVICE
DIVISION OF DESIGN AND CONSTRUCTION

STD DWG
2319

3/30/2018

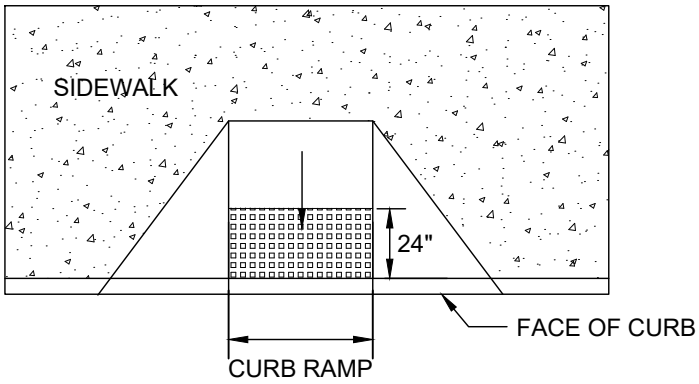

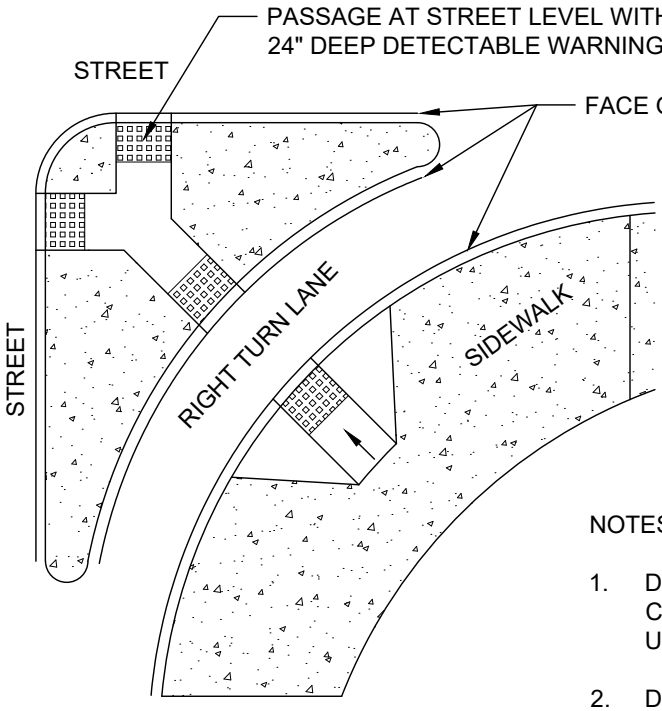

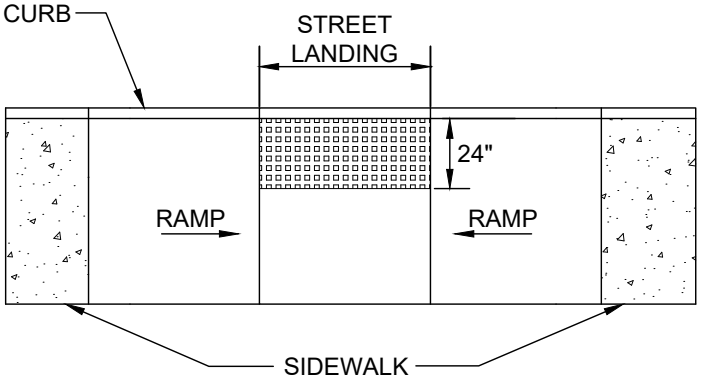

NOTES:

1. DETECTABLE WARNINGS SHALL BE PROVIDED WHEREVER A CURB RAMP CROSSES A VEHICULAR WAY. EXCLUDING UNSIGNALIZED DRIVEWAY CROSSINGS.

2. DETECTABLE WARNINGS SHALL BE PROVIDED 24" IN THE DIRECTION OF TRAVEL AND EXTEND THE FULL WIDTH OF THE CURB RAMP OR FLUSH SURFACE. THE DETECTABLE WARNING SHALL BE LOCATED ADJACENT TO THE CURB LINE.

3. MATERIALS SHALL COMPLY WITH CMSC 608 AND DPS ADA RULES AND REGULATIONS.

4. DETECTABLE WARNINGS SHALL BE PLACED 6" TO 8" BEHIND THE FACE OF CURB AND BEHIND THE CURB JOINT.

5. CAST IN PLACE OR ANY NON-SURFACE APPLIED DETECTABLE WARNING SHALL HAVE A MINIMUM OF 3" OF CONCRETE ON EACH SIDE OF THE WARNING.

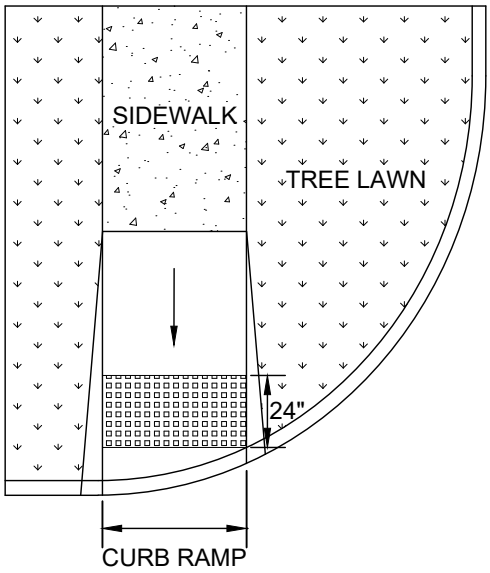

CURB RAMP DETECTABLE WARNINGS

CITY OF COLUMBUS, OHIO
DEPARTMENT OF PUBLIC SERVICE
DIVISION OF DESIGN AND CONSTRUCTION

STD DWG
2319

3/30/2018

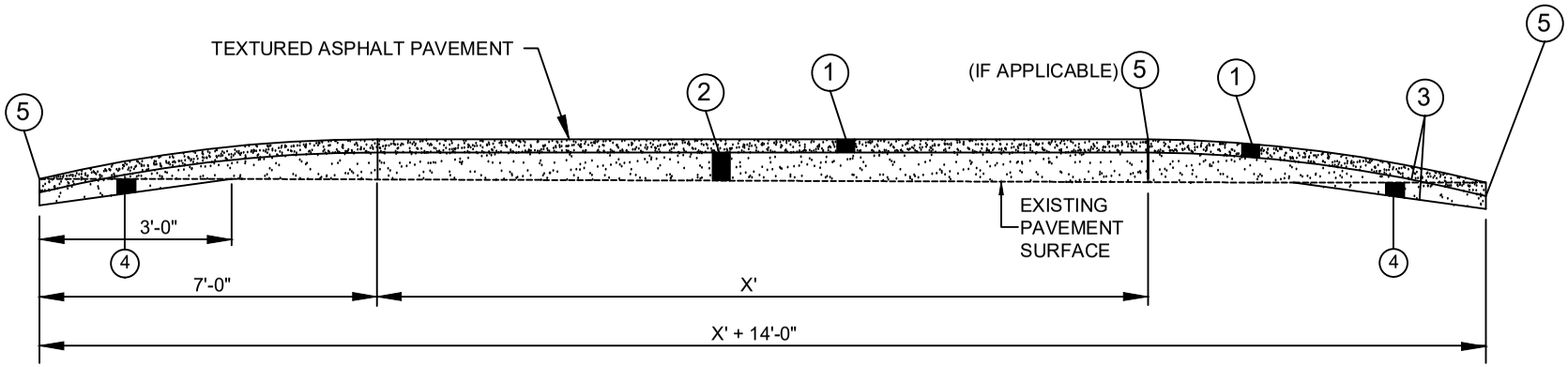

1. ITEM 441 - 1 ½" ASPHALT CONCRETE, SURFACE COURSE (TYPE 1), PG64-22
2. ITEM 441 - VAR. ASPHALT CONCRETE, INTERMEDIATE COURSE (TYPE 2), PG64-22
3. ITEM 407 - TACK COAT
4. ASPHALT REMOVED
5. ITEM 423 - CRACK SEALING, TYPE I

THE TEMPERATURE FOR ITEM 441 - ASPHALT CONCRETE, INTERMEDIATE COURSE SHALL BE < 150° F BEFORE ITEM 441 - ASPHALT CONCRETE, SURFACE COURSE CAN BE PLACED.

X = VARIES ACCORDING TO STREET WIDTH.

ITEM SPECIAL: INTERSECTION SPEED TABLE (EACH)

CROSS - SECTION

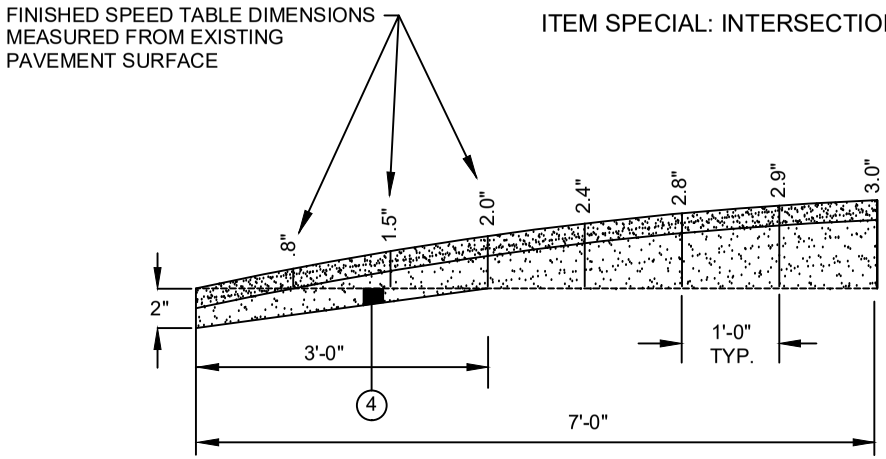

INTERSECTION SPEED TABLE

CITY OF COLUMBUS, OHIO
DEPARTMENT OF PUBLIC SERVICE
DIVISION OF DESIGN AND CONSTRUCTION

CITY ENGINEER

STD DWG
2337

4/30/2018

SHT 1 OF 2

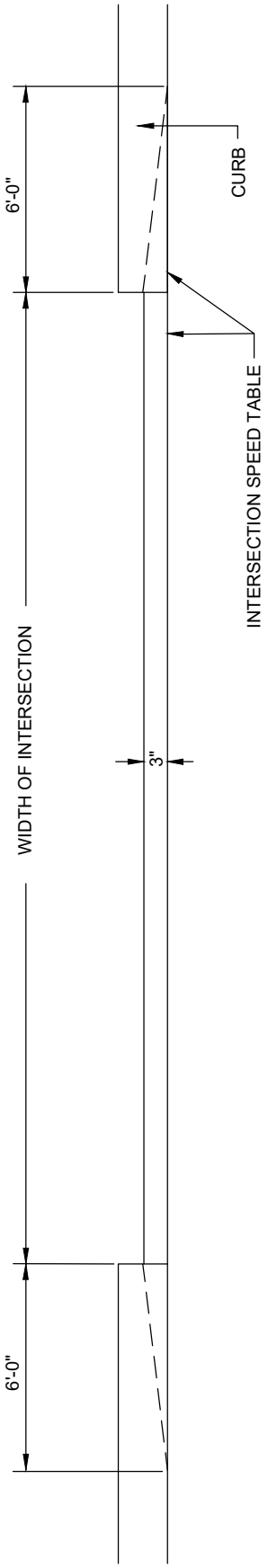

FOUR - LEG INTERSECTION

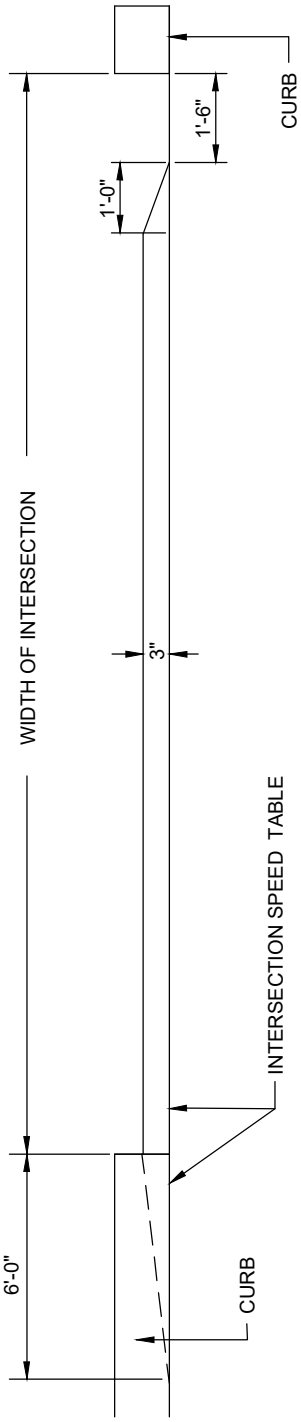

THREE - LEG INTERSECTION

ROADWAY CROSS - SECTION

INTERSECTION SPEED TABLE

CITY OF COLUMBUS, OHIO
DEPARTMENT OF PUBLIC SERVICE
DIVISION OF DESIGN AND CONSTRUCTION

STD DWG
2337

4/30/2018

SHT 2 OF 2

NOTES:

1. SHIPPING WEIGHT OF RECEPTACLE SHALL BE 280 LBS, MIN.
2. RECEPTACLE SHALL HAVE SIDE DOOR ACCESS. USE OIL IMPREGNATED BRONZE BUSHINGS AND STAINLESS STEEL PIVOT PINS FOR DOOR MOVEMENT, WITH 3/16" SOLID STEEL LATCH ASSEMBLY (NO LOCK).
3. ALL FABRICATED METAL COMPONENTS SHALL BE STEEL SHOTBLASTED, ETCHED, PHOSPHATIZED, PREHEATED, AND ELECTROSTATICALLY POWDER-COATED WITH T.G.I.C. POLYESTER POWDER COATINGS, 8-10 MILS THICK. ALL PARTS SHALL BE BLACK POWDER COATED.
4. RECEPTACLES SHALL NOT BE INSTALLED NEXT TO ON-STREET PARKING.
5. LINER SHALL BE BLACK HIGH-DENSITY POLYETHYLENE PLASTIC. PLASTIC LINER REINFORCED, RIBBED AND MOLDED FOR LONGER LIFE, MINIMUM HEIGHT 26-3/4" - MAXIMUM 27-1/4", DIAMETER MINIMUM 21-1/2" - MAXIMUM 21-3/4".

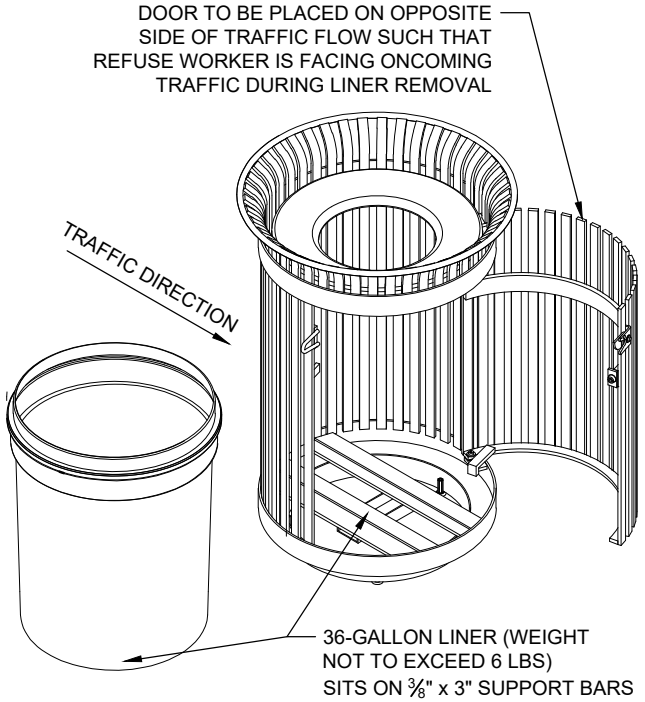

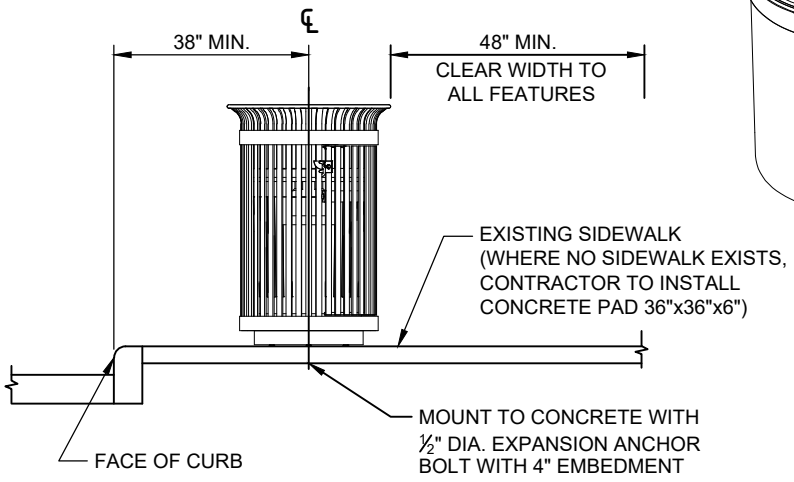

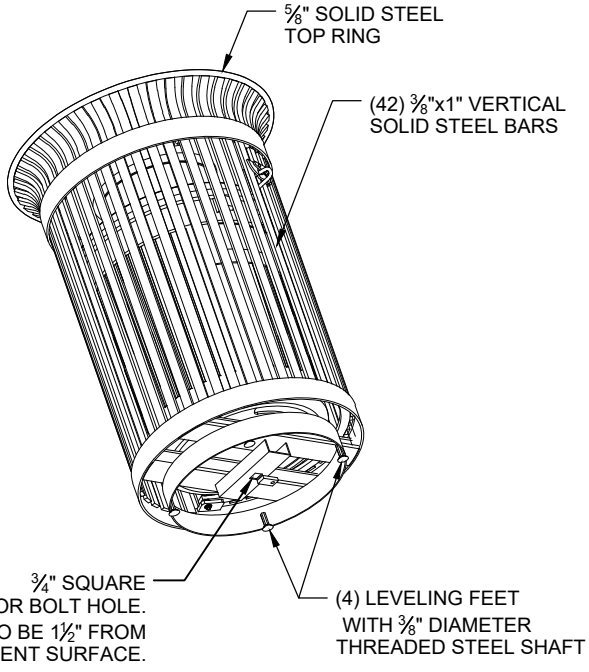

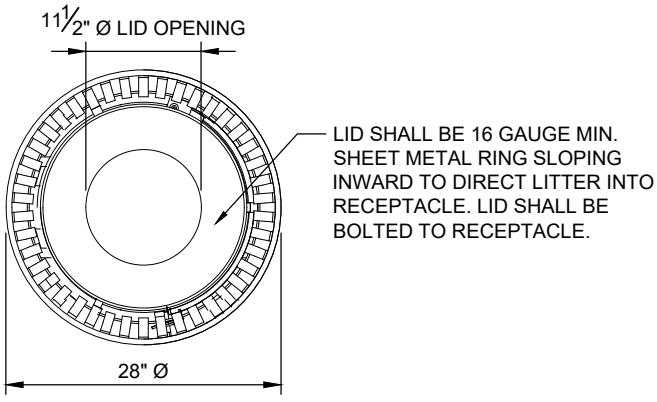

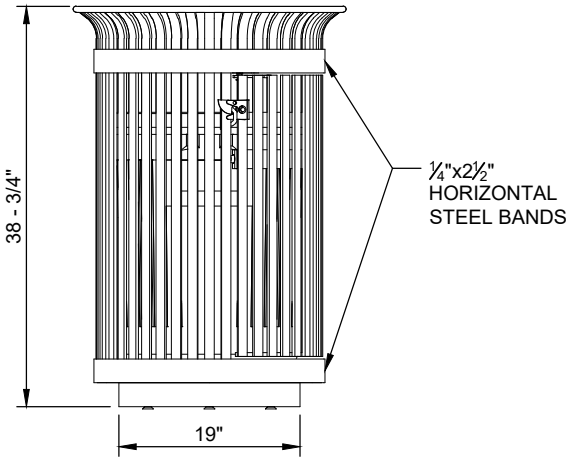

LITTER RECEPTACLE
36 GALLON CAPACITY

CITY OF COLUMBUS, OHIO DEPARTMENT OF PUBLIC SERVICE DIVISION OF DESIGN AND CONSTRUCTION	STD DWG 2400
	12/31/2018
CITY ENGINEER	SHT 1 OF 1

NOTES:

1. SHIPPING WEIGHT OF RECEPTACLE SHALL BE 280 LBS, MIN.
2. RECEPTACLE SHALL HAVE SIDE DOOR ACCESS. USE OIL IMPREGNATED BRONZE BUSHINGS AND STAINLESS STEEL PIVOT PINS FOR DOOR MOVEMENT, WITH 3/16" SOLID STEEL LATCH ASSEMBLY (NO LOCK).
3. ALL FABRICATED METAL COMPONENTS SHALL BE STEEL SHOTBLASTED, ETCHED, PHOSPHATIZED, PREHEATED, AND ELECTROSTATICALLY POWDER-COATED WITH T.G.I.C. POLYESTER POWDER COATINGS, 8-10 MILS THICK. ALL PARTS SHALL BE BLACK POWDER COATED.
4. RECEPTACLES SHALL NOT BE INSTALLED NEXT TO ON-STREET PARKING.
5. LINER SHALL BE BLACK HIGH-DENSITY POLYETHYLENE PLASTIC. PLASTIC LINER REINFORCED, RIBBED AND MOLDED FOR LONGER LIFE, MINIMUM HEIGHT 26-3/4" - MAXIMUM 27-1/4", DIAMETER MINIMUM 21-1/2" - MAXIMUM 21-3/4".

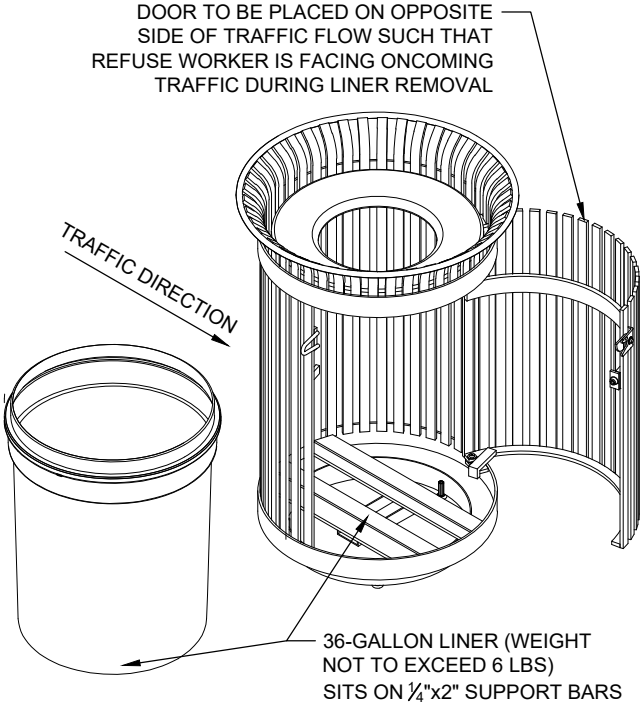

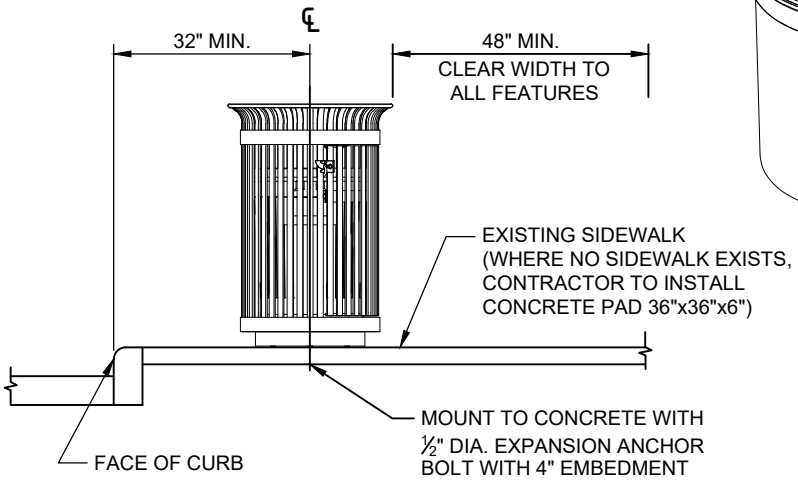

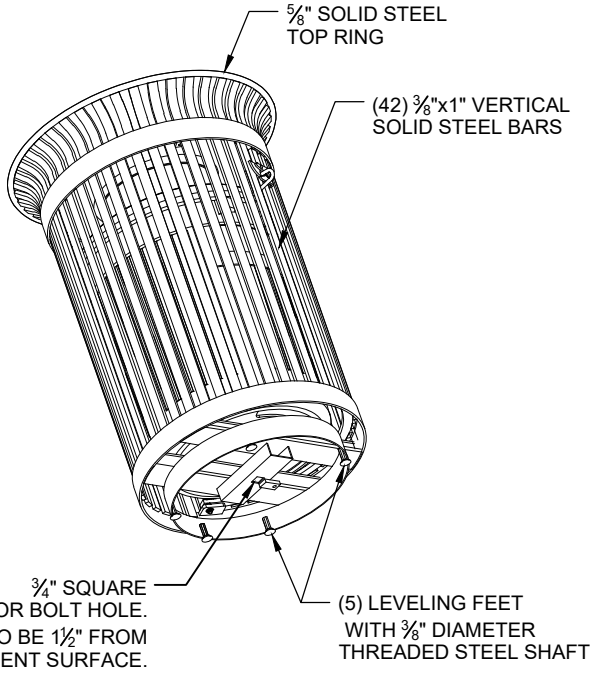

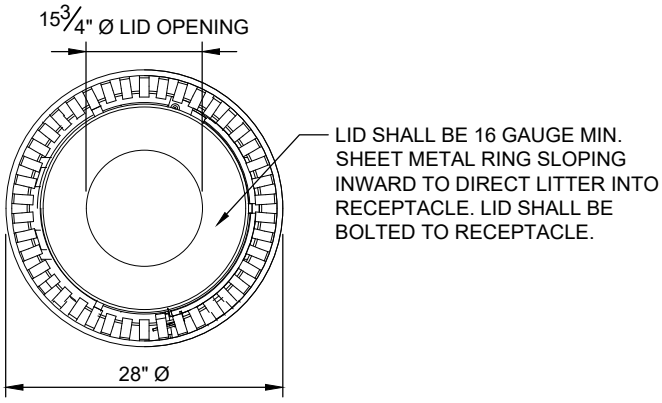

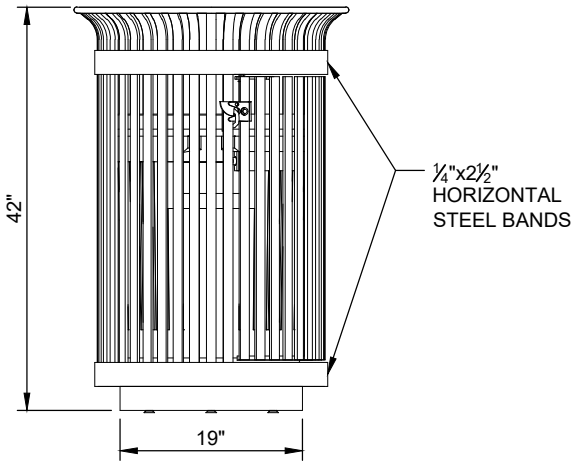

LITTER RECEPTACLE
36 GALLON CAPACITY

CITY OF COLUMBUS, OHIO DEPARTMENT OF PUBLIC SERVICE DIVISION OF DESIGN AND CONSTRUCTION	STD DWG 2400
	4/30/2018
CITY ENGINEER	SHT 1 OF 1