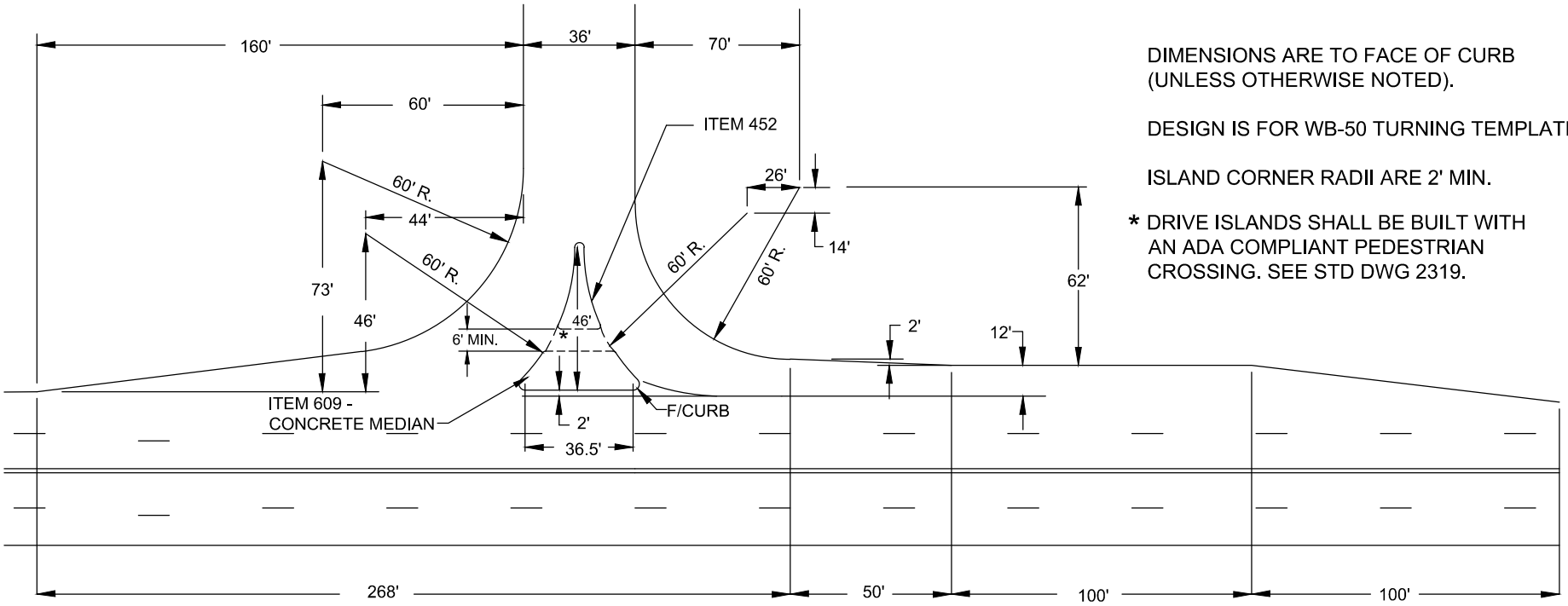

DIMENSIONS ARE TO FACE OF CURB (UNLESS OTHERWISE NOTED).

DESIGN IS FOR WB-50 TURNING TEMPLATE.

ISLAND CORNER RADII ARE 2' MIN.

* DRIVE ISLANDS SHALL BE BUILT WITH AN ADA COMPLIANT PEDESTRIAN CROSSING. SEE STD DWG 2319.

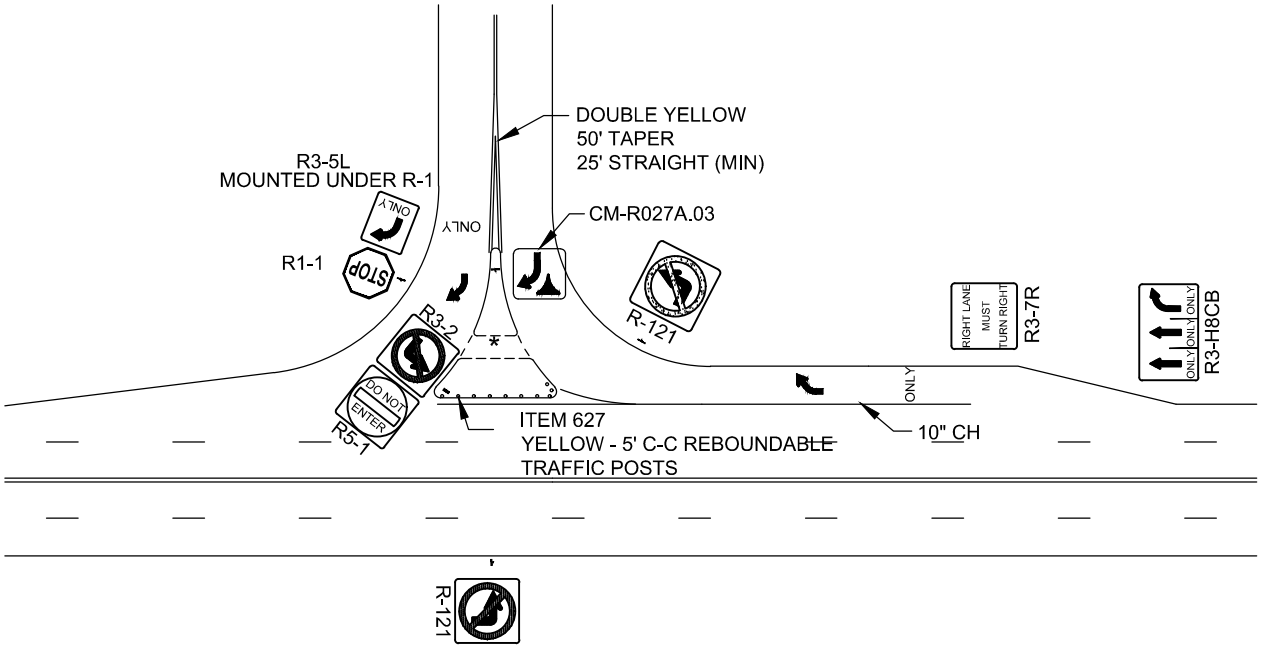

DRIVEWAY
RIGHT IN & RIGHT OUT
WITH ADD LANE

CITY OF COLUMBUS, OHIO
DEPARTMENT OF PUBLIC SERVICE
DIVISION OF DESIGN AND CONSTRUCTION

CITY ENGINEER

STD DWG
2213

6/1/13

SHT 1 OF 1