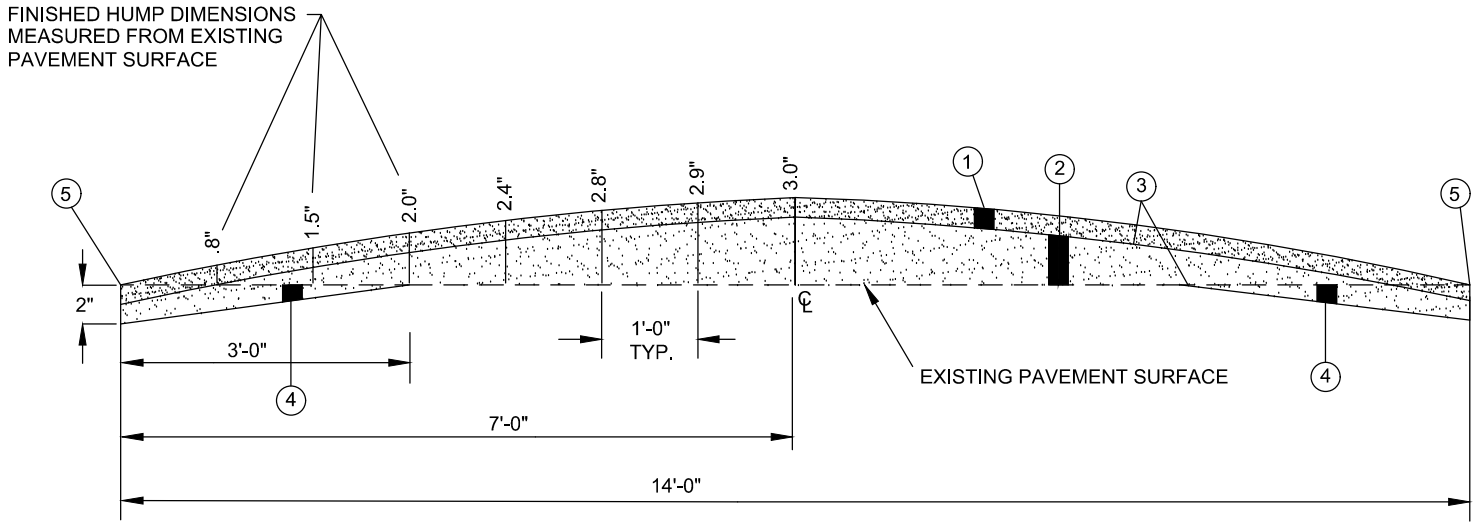

CROSS - SECTION

1. ITEM 448 - 1 ½" ASPHALT CONCRETE, SURFACE COURSE (MEDIUM TRAFFIC), PG64-22
2. ITEM 448 - VAR. ASPHALT CONCRETE, INTERMEDIATE COURSE (MEDIUM TRAFFIC), PG64-22
3. ITEM 407 - TACK COAT
4. ASPHALT REMOVED
5. ITEM 423 - CRACK SEALING, TYPE I

THE TEMPERATURE FOR ITEM 448 - ASPHALT CONCRETE, INTERMEDIATE COURSE SHALL BE < 150° F BEFORE ITEM 448 - ASPHALT CONCRETE, SURFACE COURSE CAN BE PLACED.

ITEM SPECIAL: 14' SPEED HUMP (EACH)

TOLERANCES (@ CREST) -¼" TO +½"

CONTACT CITY OF COLUMBUS PAVEMENT MARKING MANAGER FOR DIRECTION ON REQUIRED PAVEMENT MARKINGS.

14' SPEED HUMP

CITY OF COLUMBUS, OHIO
DEPARTMENT OF PUBLIC SERVICE
DIVISION OF DESIGN AND CONSTRUCTION

CITY ENGINEER

STD DWG
2335

6/1/13

SHT 1 OF 3

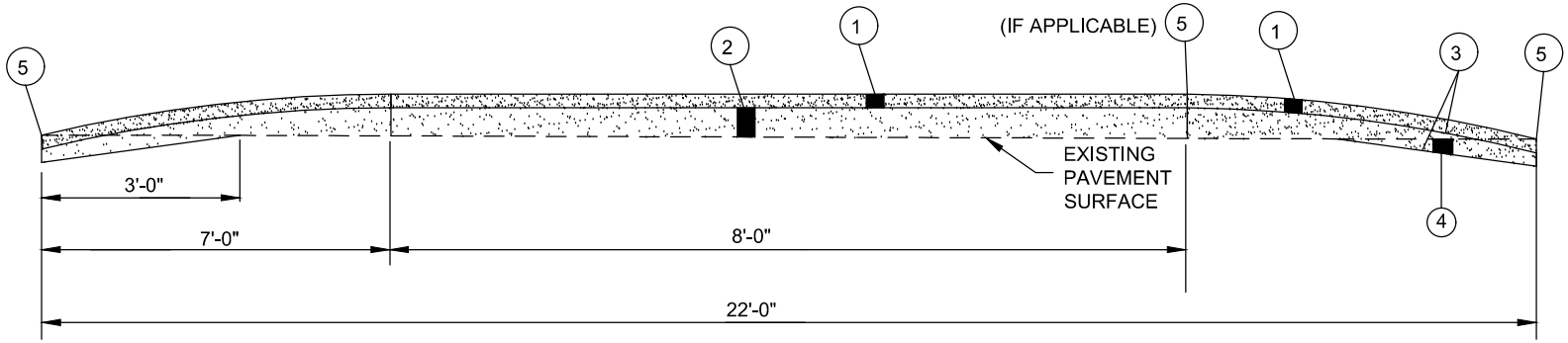

1. ITEM 448 - 1 ½" ASPHALT CONCRETE, SURFACE COURSE (MEDIUM TRAFFIC), PG64-22
2. ITEM 448 - VAR. ASPHALT CONCRETE, INTERMEDIATE COURSE (MEDIUM TRAFFIC), PG64-22
3. ITEM 407 - TACK COAT
4. ASPHALT REMOVED
5. ITEM 423 - CRACK SEALING, TYPE I

THE TEMPERATURE FOR ITEM 448 - ASPHALT CONCRETE, INTERMEDIATE COURSE SHALL BE < 150° F BEFORE ITEM 448 - ASPHALT CONCRETE, SURFACE COURSE CAN BE PLACED.

ITEM SPECIAL: 22' SPEED HUMP (EACH)

TOLERANCES (@ CREST) -¼" TO +½"

CONTACT CITY OF COLUMBUS PAVEMENT MARKING MANAGER FOR DIRECTION ON REQUIRED PAVEMENT MARKINGS.

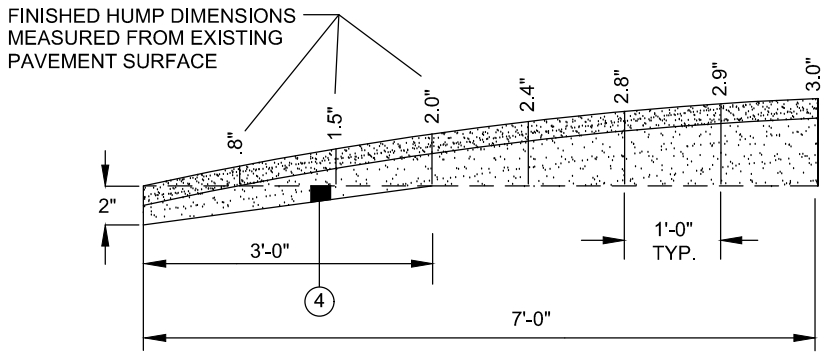

CROSS - SECTION

22' SPEED HUMP

CITY OF COLUMBUS, OHIO
DEPARTMENT OF PUBLIC SERVICE
DIVISION OF DESIGN AND CONSTRUCTION

STD DWG
2335
6/1/13
SHT 2 OF 3

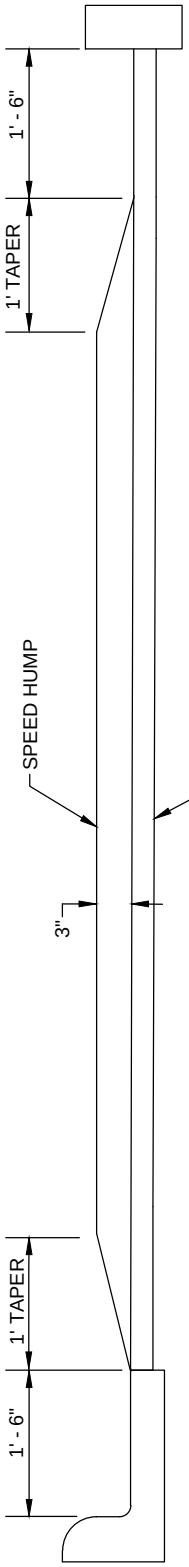

CURB & GUTTER OR STRAIGHT CURB

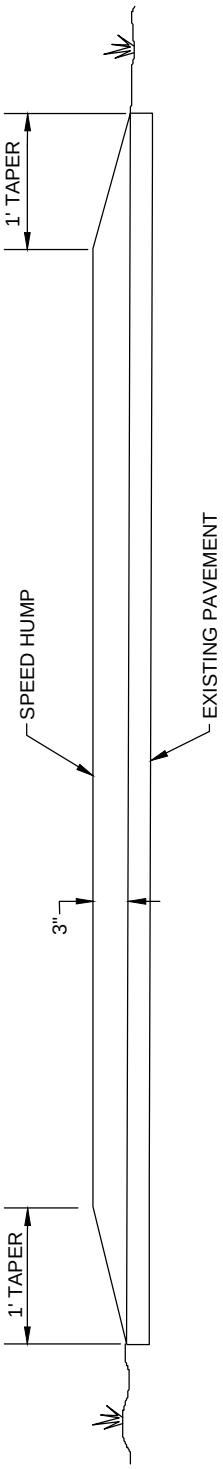

UNCURBED

ROADWAY CROSS - SECTION

NOTE: DRAWING DOES NOT SHOW REQUIRED ASPHALT REMOVAL. REFER TO SHEETS 1 OF 3 AND 2 OF 3.

SPEED HUMP

CITY OF COLUMBUS, OHIO
DEPARTMENT OF PUBLIC SERVICE
DIVISION OF DESIGN AND CONSTRUCTION

STD DWG
2335

6/1/13

SHT 3 OF 3