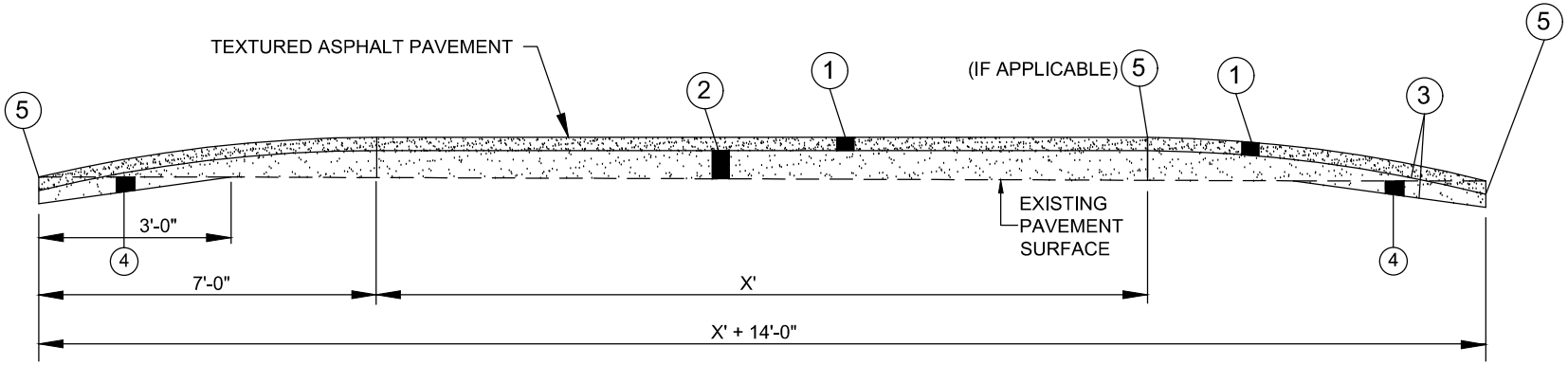

1. ITEM 448 - 1 ½" ASPHALT CONCRETE, SURFACE COURSE (MEDIUM TRAFFIC), PG64-22
2. ITEM 448 - VAR. ASPHALT CONCRETE, INTERMEDIATE COURSE (MEDIUM TRAFFIC), PG64-22
3. ITEM 407 - TACK COAT
4. ASPHALT REMOVED
5. ITEM 423 - CRACK SEALING, TYPE I

THE TEMPERATURE FOR ITEM 448 - ASPHALT CONCRETE, INTERMEDIATE COURSE SHALL BE < 150° F BEFORE ITEM 448 - ASPHALT CONCRETE, SURFACE COURSE CAN BE PLACED.

X = VARIES ACCORDING TO STREET WIDTH.

ITEM SPECIAL: INTERSECTION SPEED TABLE (EACH)

CONTACT CITY OF COLUMBUS PAVEMENT MARKING MANAGER FOR DIRECTIONS ON REQUIRED PAVEMENT MARKING.

CROSS - SECTION

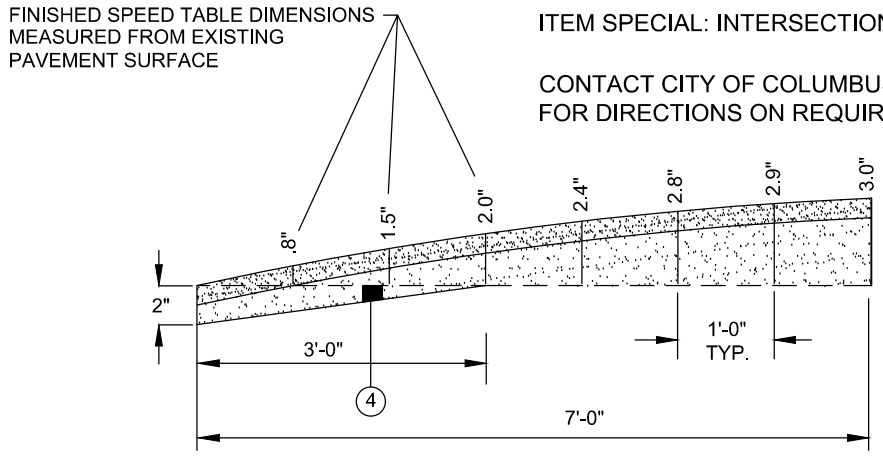

INTERSECTION SPEED TABLE

CITY OF COLUMBUS, OHIO
DEPARTMENT OF PUBLIC SERVICE
DIVISION OF DESIGN AND CONSTRUCTION

CITY ENGINEER

STD DWG 2337

6/1/13

SHT 1 OF 2

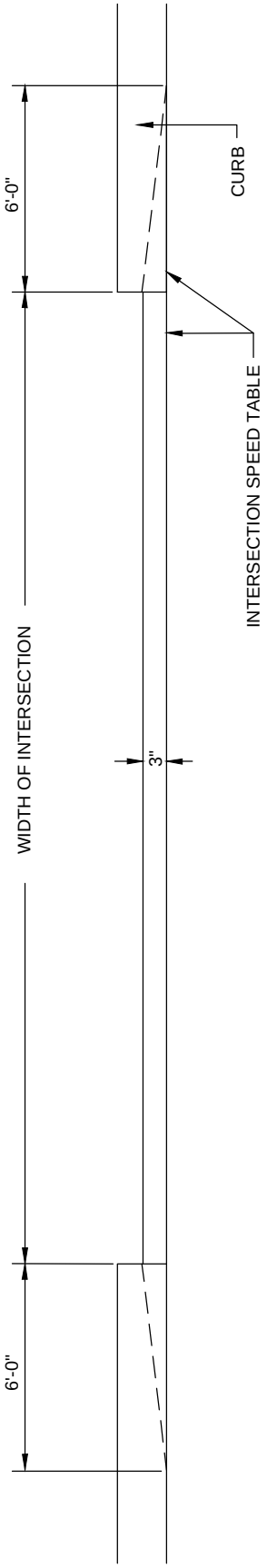

FOUR - LEG INTERSECTION

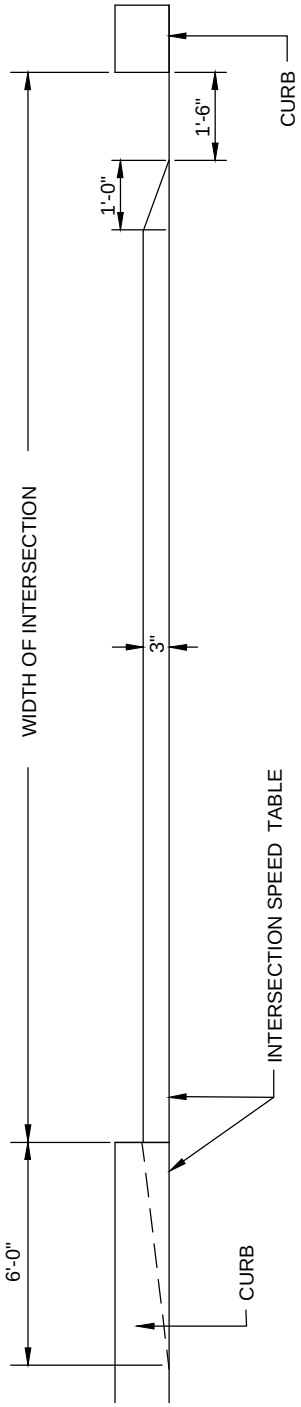

THREE - LEG INTERSECTION

ROADWAY CROSS - SECTION

INTERSECTION SPEED TABLE

CITY OF COLUMBUS, OHIO
DEPARTMENT OF PUBLIC SERVICE
DIVISION OF DESIGN AND CONSTRUCTION

STD DWG
2337

6/1/13

SHT 2 OF 2