FOR USE ON A PARCEL WITH A SINGLE DWELLLING

* CURB OR COMBINED CURB AND GUTTER SHALL BE TAKEN OUT AND REPLACED WITH CONCRETE, SEPARATED FROM THE DRIVE BY 1/2" PREMOLDED EXPANSION JOINT. WHEN LESS THAN 5 FT. OF A CURB SECTION REMAINS AFTER THE CURB CUT IS LOCATED, IT SHALL ALSO BE REMOVED AND REPLACED. CURB SHALL BE CONSTRUCTED IN MINIMUM 5 FT. SECTIONS AND MAXIMUM 10 FT. SECTIONS.

** SIDEWALK WIDTH SHALL BE PER STANDARD DRAWING 2300. SIDEWALK THICKNESS SHALL BE 6" CONCRETE TO ONE FULL PANEL (MIN. 5 FT.) BEYOND EDGE OF DRIVE.

*** 5 FT. ON ROADWAYS WITH 35 MPH SPEED LIMIT, 2 FT. FOR SPEED LIMITS LESS THAN 35 MPH.

PAR = PEDESTRIAN ACCESS ROUTE. SET PAR THROUGH APPROACH AT SIDEWALK GRADE TO AVOID RAMP OR TRANSITION. IF NOT POSSIBLE, THEN MINIMIZE TRANSITION FROM SIDEWALK TO APPROACH.

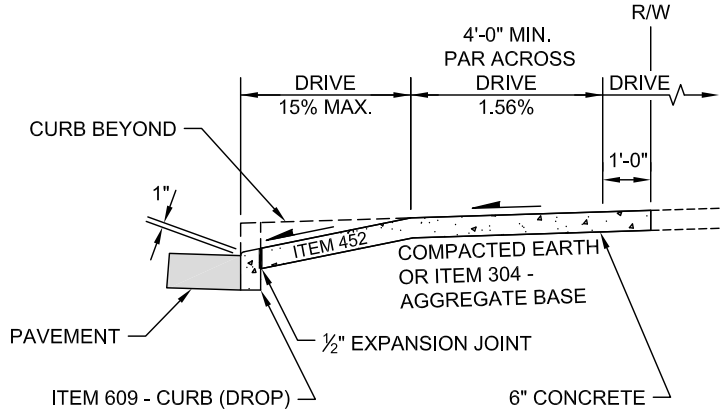

STRAIGHT CURB SECTION

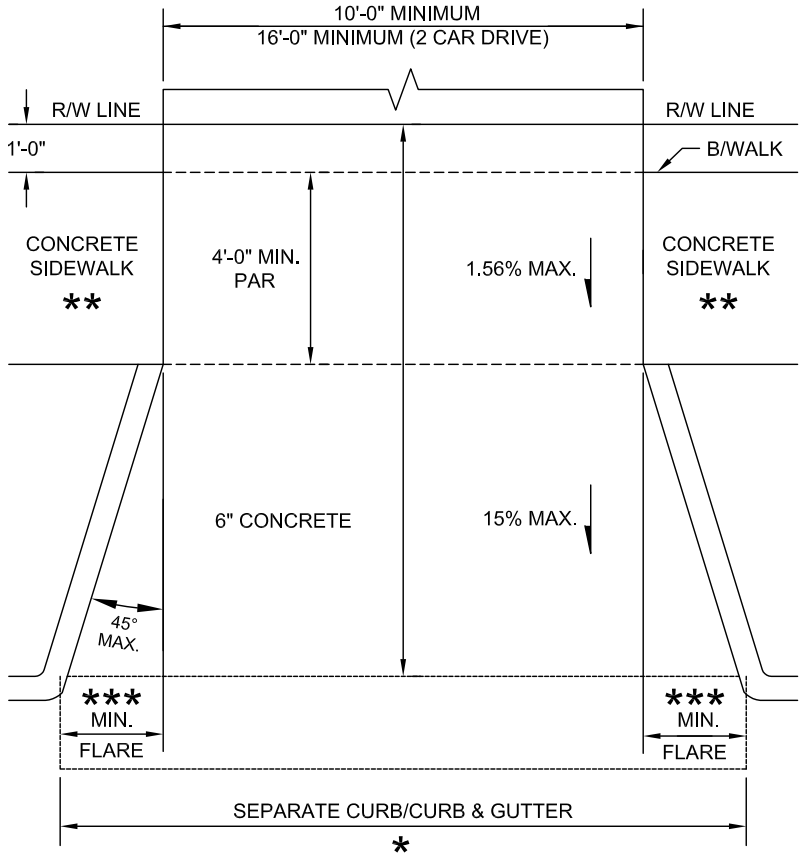

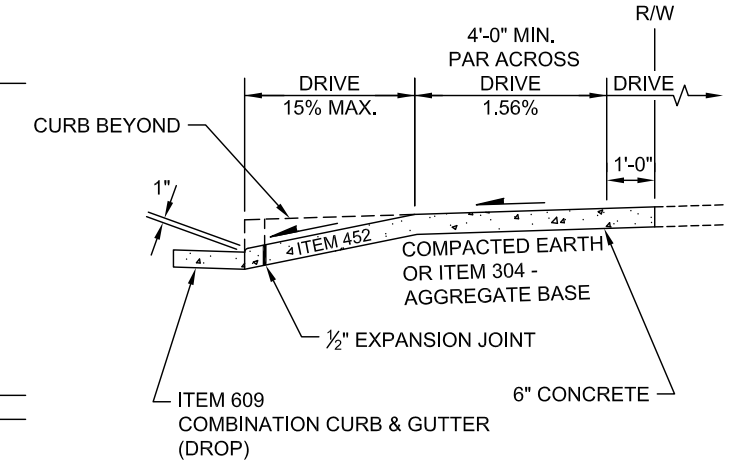

COMBINATION CURB AND GUTTER SECTION

DRIVEWAY, RESIDENTIAL CURBED ROADWAY

CITY OF COLUMBUS, OHIO
DEPARTMENT OF PUBLIC SERVICE
DIVISION OF DESIGN AND CONSTRUCTION

CITY ENGINEER

STD DWG
2201

12/1/14

SHT 1 OF 4

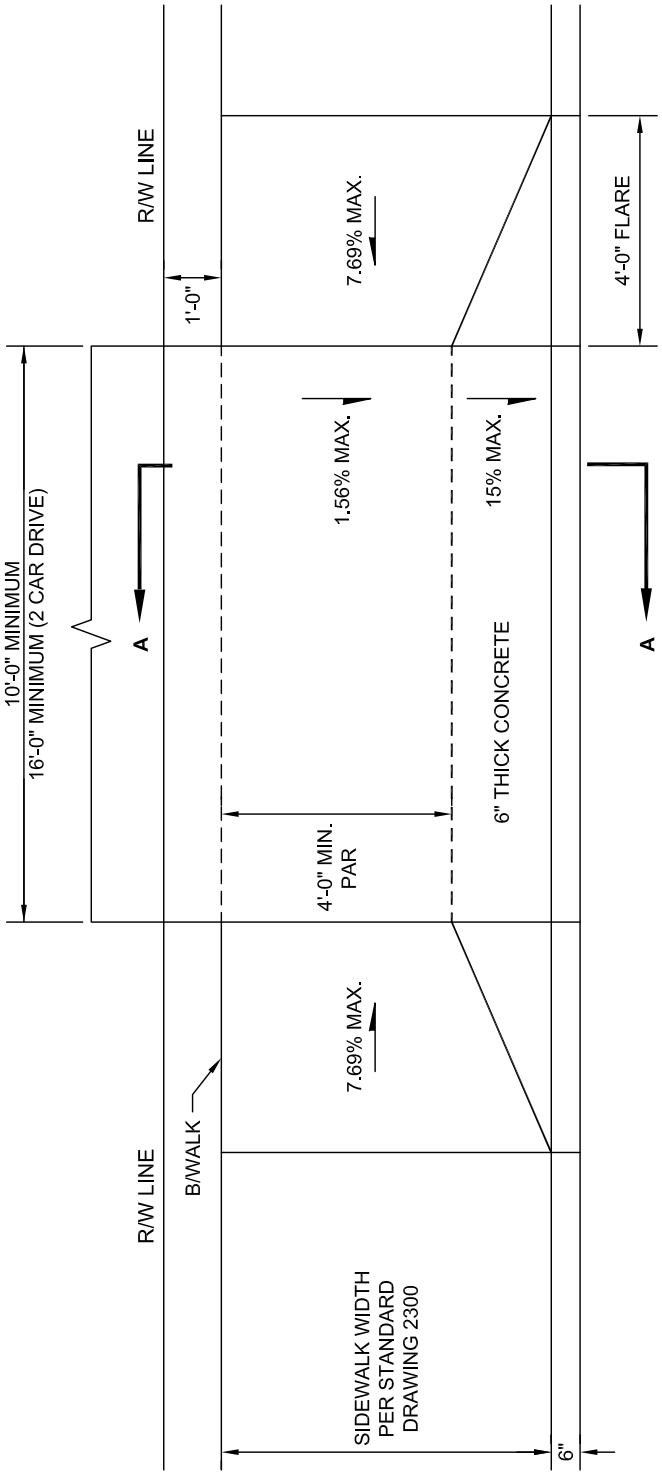

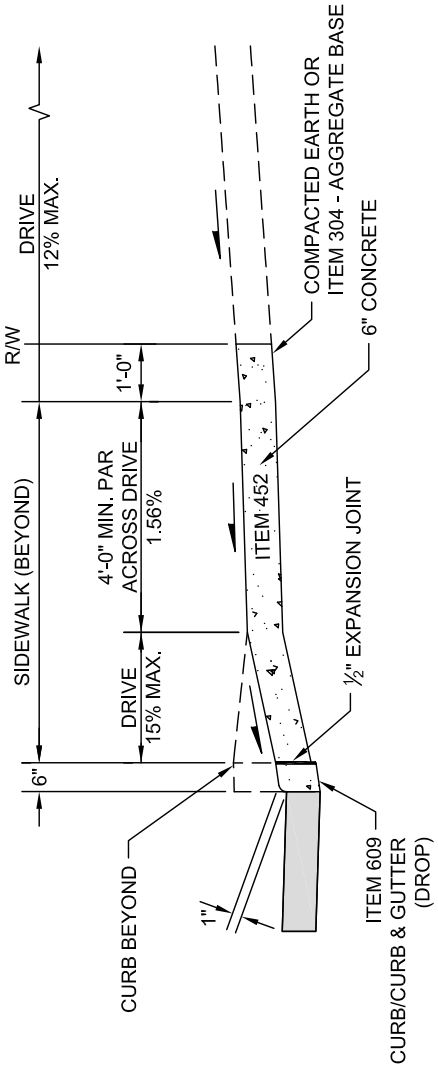

SECTION A-A
SEE SHEET 1 OF 4 FOR ADDITIONAL INFORMATION

SIDEWALK ADJACENT TO CURB

DRIVEWAY, RESIDENTIAL CURBED ROADWAY

CITY OF COLUMBUS, OHIO
DEPARTMENT OF PUBLIC SERVICE
DIVISION OF DESIGN AND CONSTRUCTION

STD DWG
2201
12/1/14
SHT 2 OF 4

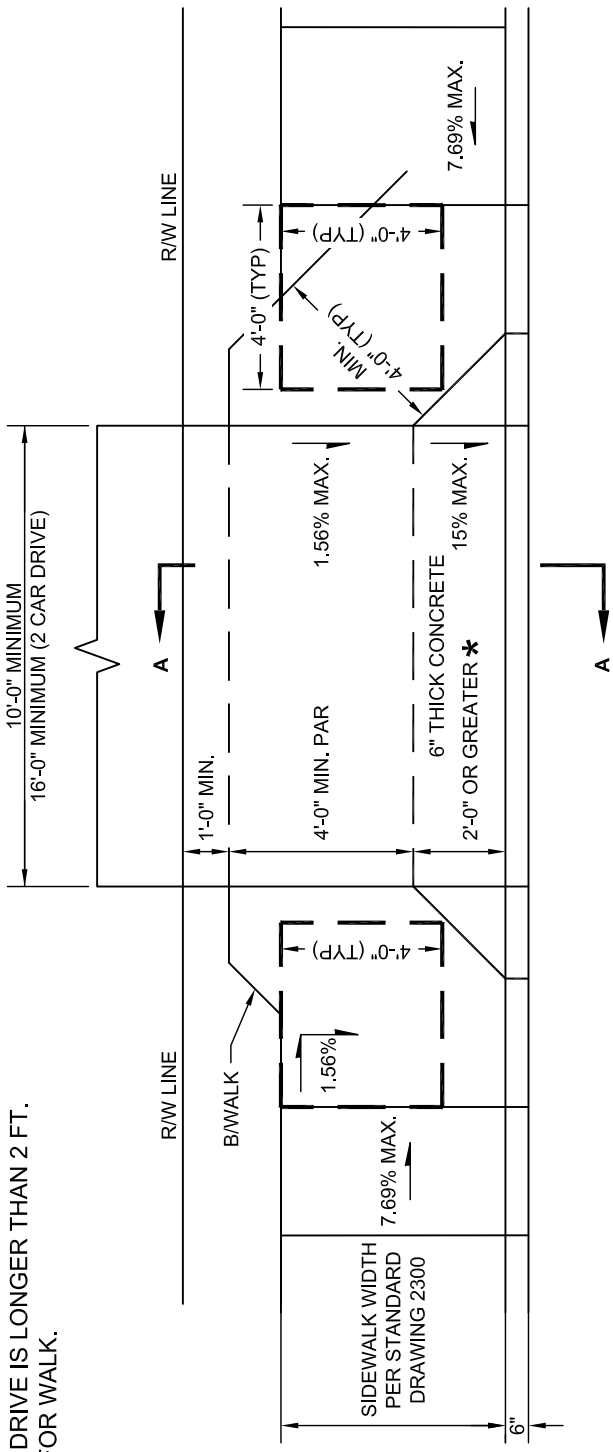

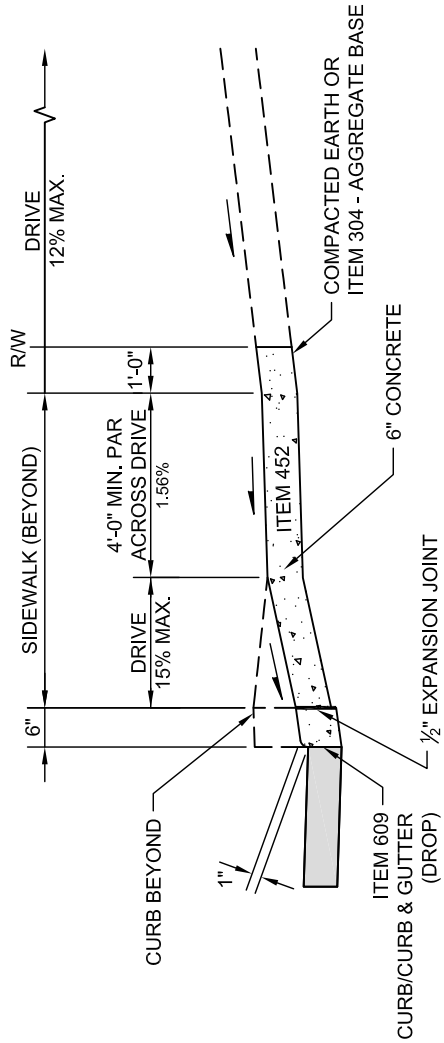

SECTION A-A
SEE SHEET 1 OF 4 FOR ADDITIONAL INFORMATION

SIDEWALK ADJACENT TO
CURB WITH RUN-AROUND

* USE WHEN FRONT RAMP OF DRIVE IS LONGER THAN 2 FT.
MAINTAIN R/W CLEARANCE FOR WALK.

DRIVEWAY, RESIDENTIAL CURBED ROADWAY

CITY OF COLUMBUS, OHIO
DEPARTMENT OF PUBLIC SERVICE
DIVISION OF DESIGN AND CONSTRUCTION

STD DWG
2201
12/1/14
SHT 3 OF 4

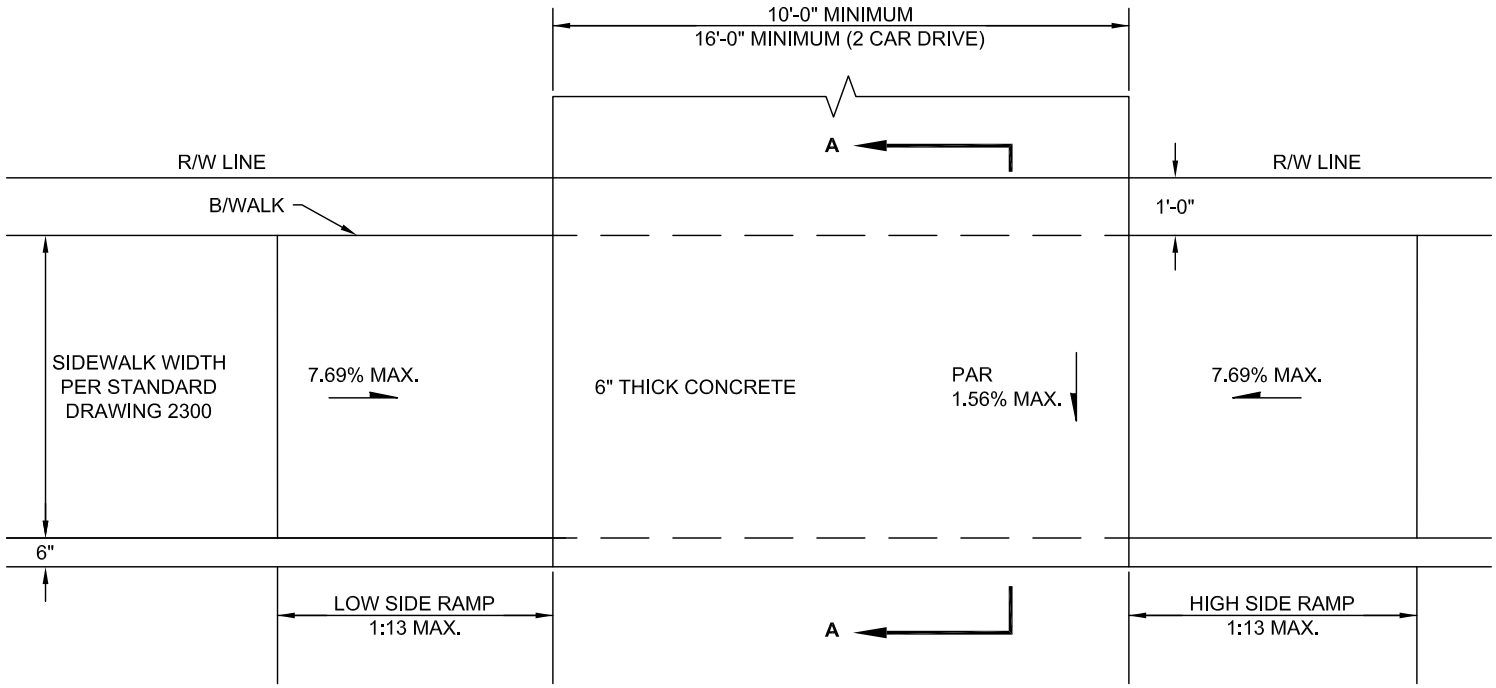

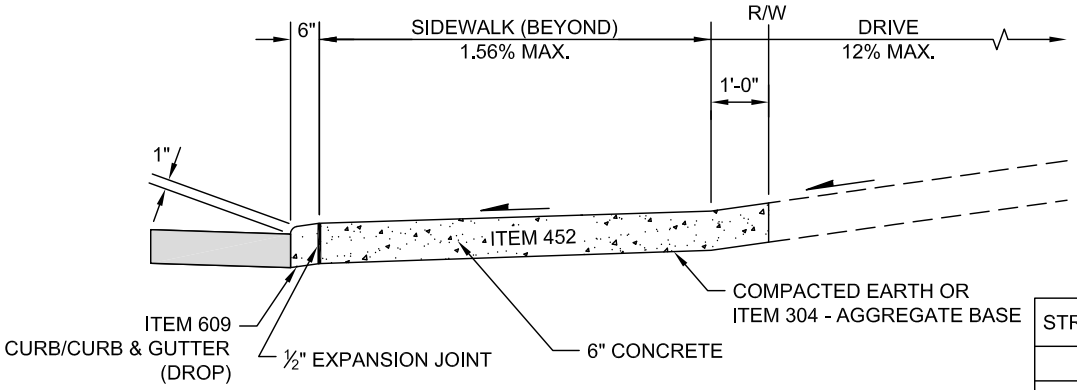

SECTION A-A
SEE SHEET 1 OF 4 FOR ADDITIONAL INFORMATION

STREET GRADE	RAMP LENGTH (1:13)	
	LOW SIDE *	HIGH SIDE *
1%	5'-6"	7'-2"
2%	5'-0"	8'-4"
3%	4'-6"	10'-0"
4%	4'-2"	12'-6"
5%	3'-10"	16'-8"

* MEASURED ALONG THE BACK OF CURB

SIDEWALK ADJACENT TO CURB

DRIVEWAY, RESIDENTIAL CURBED ROADWAY

CITY OF COLUMBUS, OHIO
DEPARTMENT OF PUBLIC SERVICE
DIVISION OF DESIGN AND CONSTRUCTION

STD DWG
2201
12/1/14
SHT 4 OF 4