NOV. 2019

CODED NOTES:

(A) ALUMINUM BUS BAR IS ONLY REQUIRED WHEN MORE THAN FOUR TERMINAL LUG ARE USED.

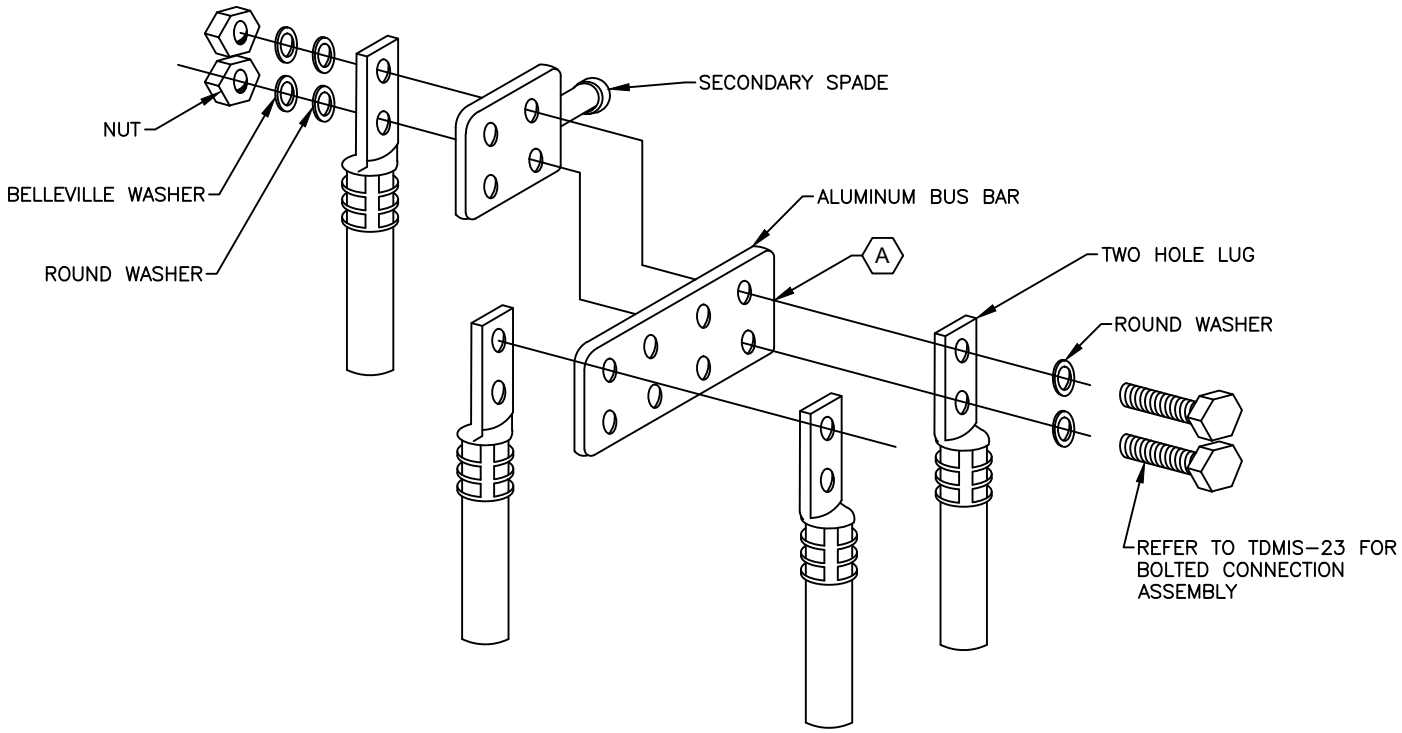

THE CITY OF COLUMBUS
DEPT. OF PUBLIC UTILITIES
DIVISION OF POWER

OVERHEAD TRANSFORMER

ALUMINUM SECONDARY CONNECTIONS

TDMIS-802