BIRD'S EYE VIEW

TIM LAI ARCHITECT 400 W RICH STREET, COLUMBUS, OH 43215 T 614 321 5128 E INFO@LAIARCHITECT.COM

TLA

SOUTH WEST CORNER ON W TOWN STREET

SOUTH EAST CORNER ON W TOWN STREET

WEST ELEVATION NEW ENTRY

SOUTH EAST CORNER ON W TOWN STREET

EXISTING CONDITION

TIM LAI ARCHITECT 400 W RICH STREET, COLUMBUS, OH 43215 T 614 321 5128 E INFO@LAIARCHITECT.COM

TLA

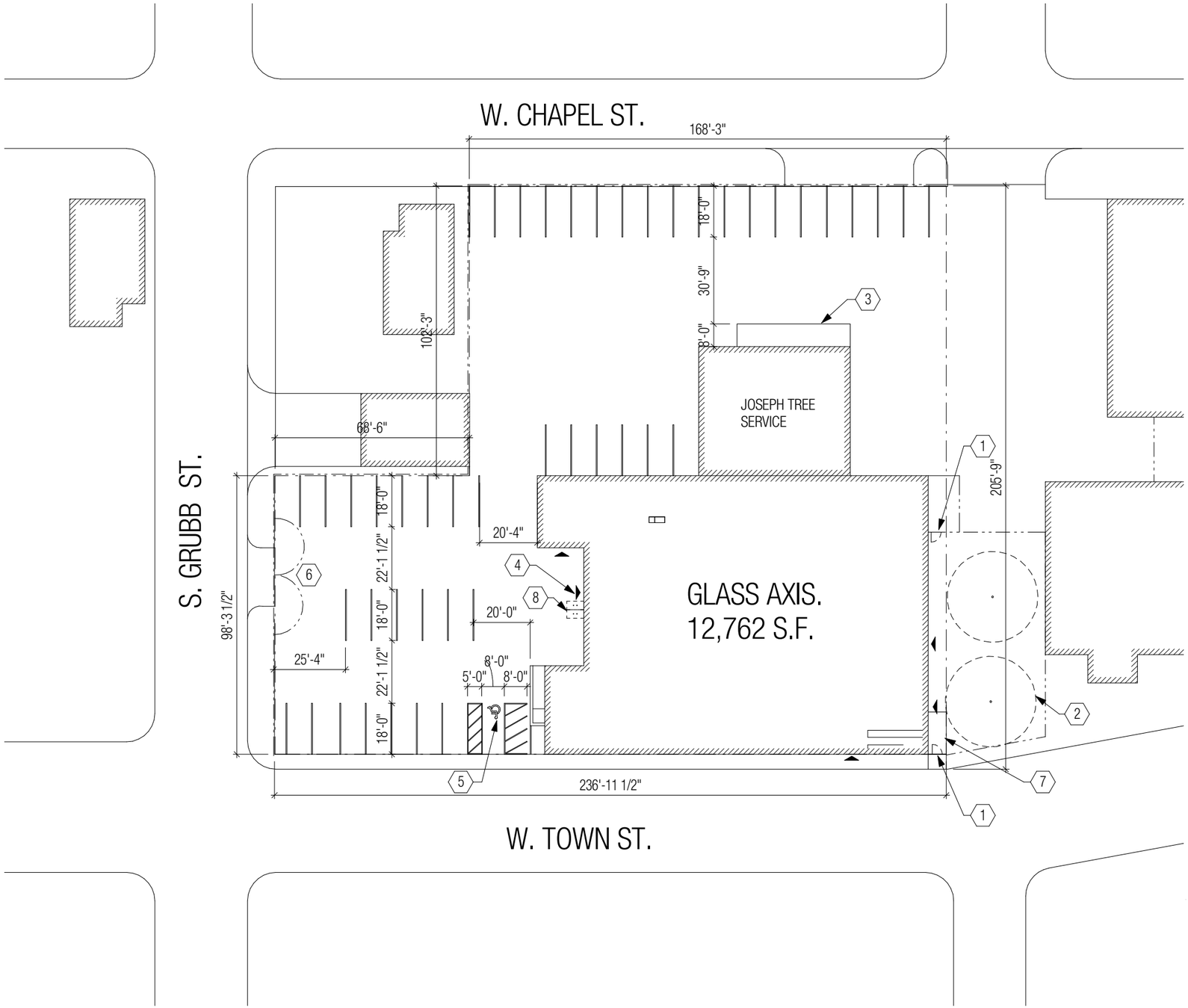

CODED NOTES

1. EXISTING 6'-0" HIGH CHAIN-LINK FENCE GATE
2. EXISTING TREE
3. EXISTING CONTAINER
4. MAIN ENTRANCE, ADA ACCESSIBLE
5. ADA PARKING SPACE W/ SIGNAGE
6. EXISTING 6'-0" HIGH CHAIN-LINK FENCE WITH GATE
7. ADA RAMP TO EXIT, WITH METAL RAILING
8. BIKE RACK 6'-0" X 3'-0"

SITE & BUILDING INFORMATION

Parcel No: 010-049562
Owner: JTS Investment Properties, LLC
Site Area: 0.95 Acre
Construction Type: IIIB
Year built: 1928
Sprinklers : No
Stories: 1
Area: 14762 SF (Glass Axis occupies 12762 SF)
Use: Mixed use (glass artist studio, gallery, retail, cafe)
Parking Space:
1690 SF/ 250 SF (Retail: Gift shop, gallery & cafe) = 7 parking space
11072 SF/ 1000 SF (Educational: Rest of the space) = 11 parking space
Total required = 18
Total provided (leased by Glass Axis) = 25
Total parking on site = 46
Total bike rack = 2

SITE PLAN

TIM LAI ARCHITECT 400 W RICH STREET, COLUMBUS, OH 43215 T 614 321 5128 E INFO@LAIARCHITECT.COM

VIEW LOOKING EAST ON W TOWN STREET

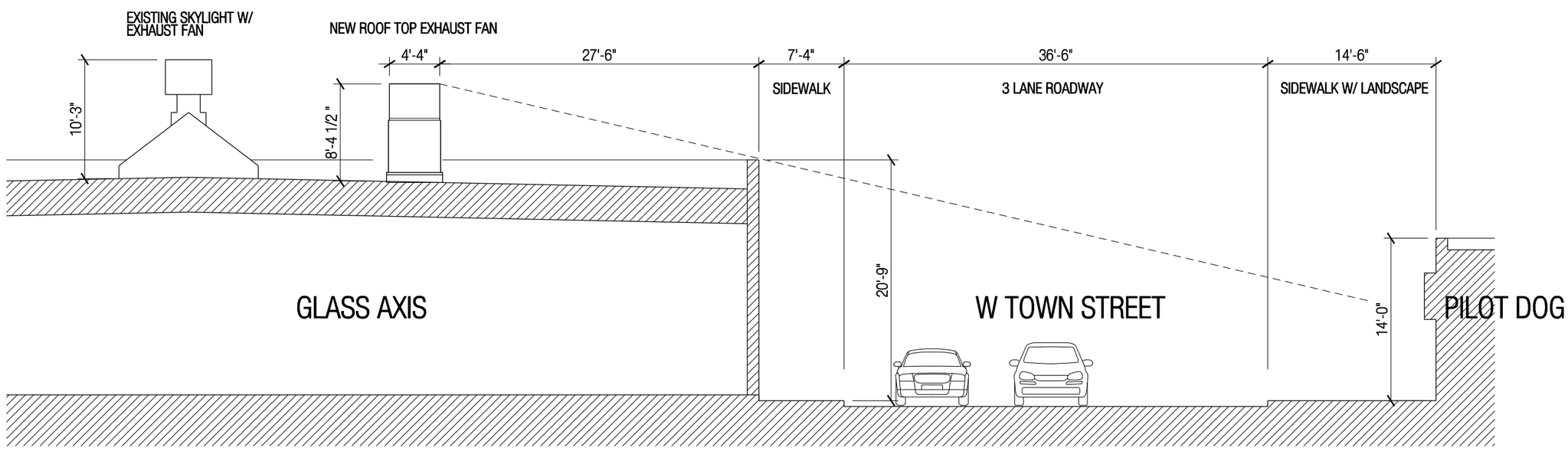

1 STREET SECTION

1"=10'-0"

STREET SECTION

TIM LAI ARCHITECT 400 W RICH STREET, COLUMBUS, OH 43215 T 614 321 5128 E INFO@LAIARCHITECT.COM

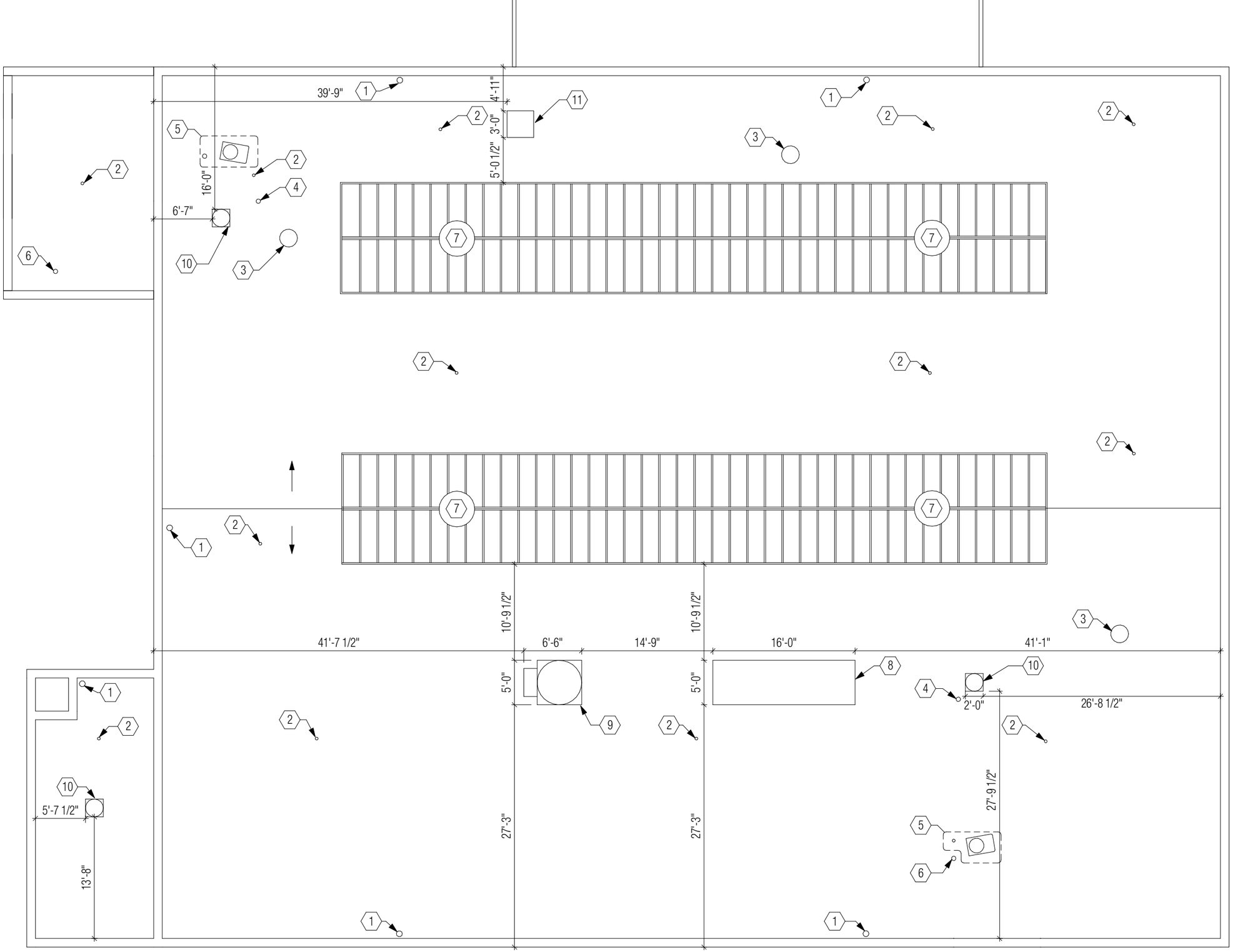

ROOF CODED NOTES

1. EXISTING 8" ROOF DRAIN
2. EXISTING 4" DIA. VENT PIPE
3. EXISTING 20" DIA. VENT
4. EXISTING 6" DIA. VENT PIPE
5. EXISTING A/C CONDENSING UNIT
6. EXISTING HEATER VENT
7. EXISTING SKYLIGHT VENT
8. (NEW) ROOF TOP UNIT, 5'W X 16'L X 5'-2"H, PAINTED
9. (NEW) EXHAUST FAN, 5' SQ. X 8' H PAINTED
10. (NEW) EXHAUST FAN, 2' SQ. X 3' H PAINTED
11. (NEW) COMPRESSING UNIT, 3' SQ. X 3'6 H PAINTED

1 ROOF PLAN

3/32"=1'-0"

PROPOSED ROOFTOP EQUIPMENT TO BE PAINTED TO MATCH EXISTING EXHAUST VENT

SHERWIN WILLIAM COLOR
SW-6342 SPICY HUE
OR EARTH TONE RED TO MATCH

EXTERIOR LATEX EGG SHELL

ROOF TOP EQUIPMENT COLOR

TIM LAI ARCHITECT 400 W RICH STREET, COLUMBUS, OH 43215 T 614 321 5128 E INFO@LAIARCHITECT.COM

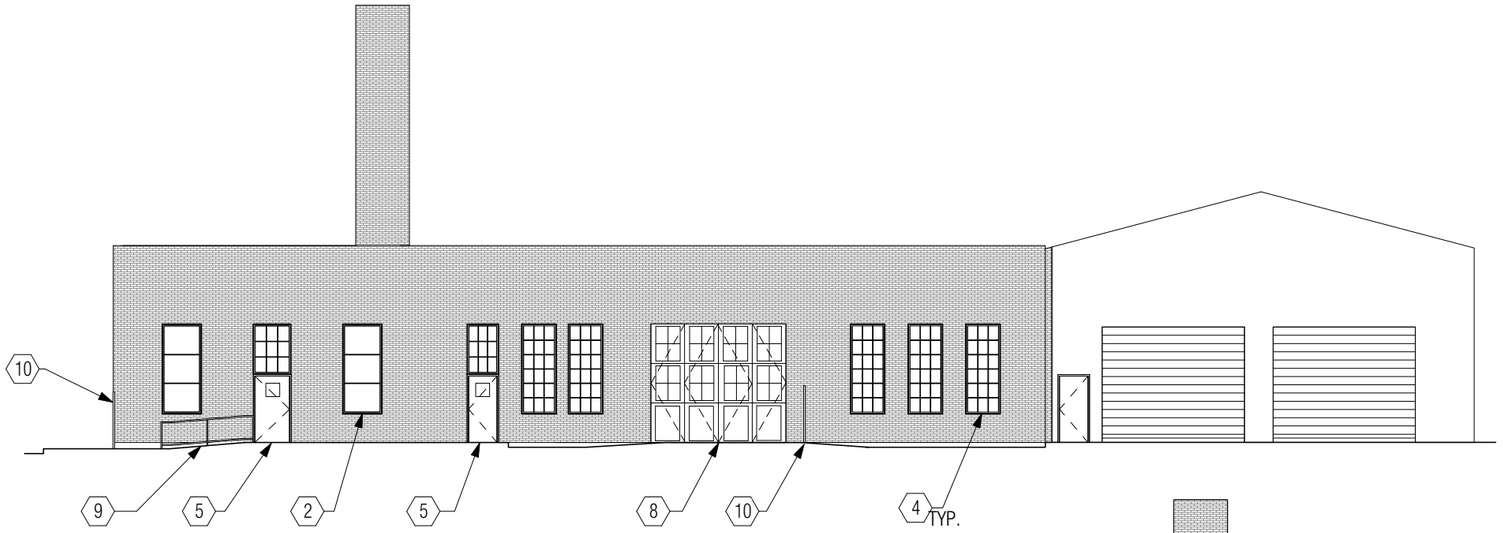

3 EAST ELEVATION

1/16"=1'-0"

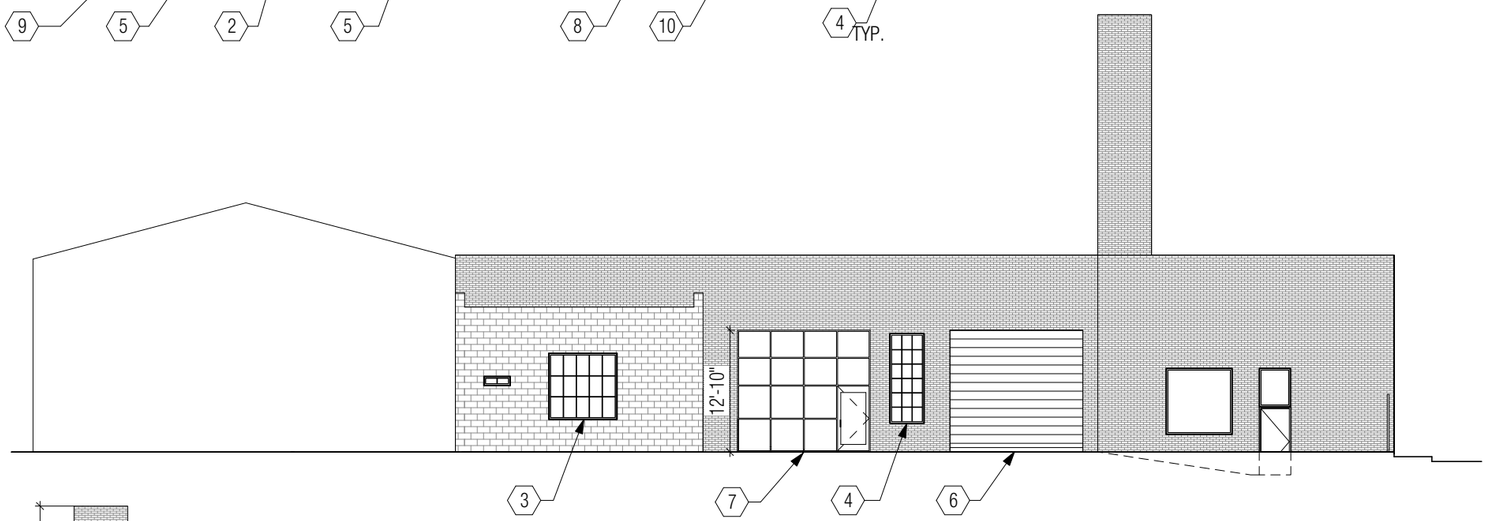

2 WEST ELEVATION

1/16"=1'-0"

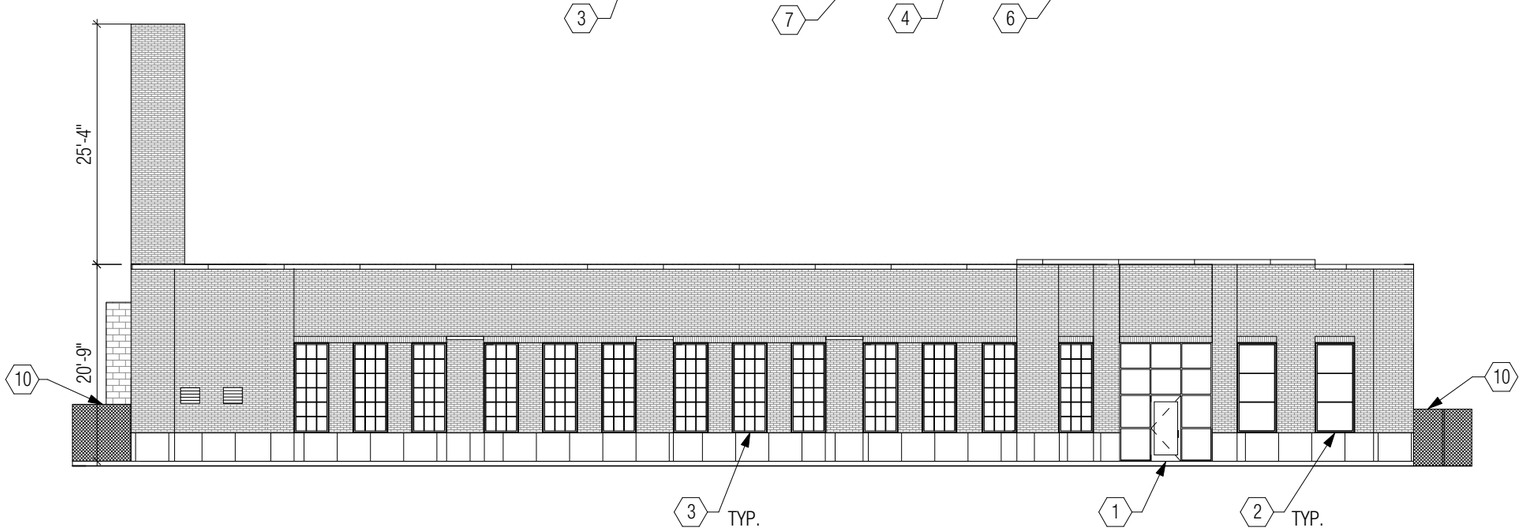

1 SOUTH ELEVATION

1/16"=1'-0"

CODED NOTES

1. EXISTING ALUMINUM. STOREFRONT ENTRANCE (DARK BRONZE FINISH)
2. EXISTING ALUMINUM STOREFRONT WINDOW TO REMAIN
3. EXISTING STEEL WINDOW, REMOVE WOOD AND PLASTIC PANEL, REPAIR AND REPLACED BROKEN GLASS PANES.
4. EXISTING STEEL WINDOW TO REMAIN
5. EXISTING METAL EXIT DOOR
6. EXISTING METAL COILING OVERHEAD DOOR
7. NEW STOREFRONT ENTRANCE (TO MATCH DARK BRONZE FINISH AT SOUTHEAST CORNER)
8. EXISTING FOLDING DOOR TO REMAIN
9. ADA RAMP TO EXIT, WITH METAL RAILING, SEE DETAIL FOR RAILING DESIGN
10. EXISTING 6'-0" CHAIN-LINK FENCE WITH GATE

EXTERIOR ELEVATIONS

TIM LAI ARCHITECT 400 W RICH STREET, COLUMBUS, OH 43215 T 614 321 5128 E INFO@LAIARCHITECT.COM

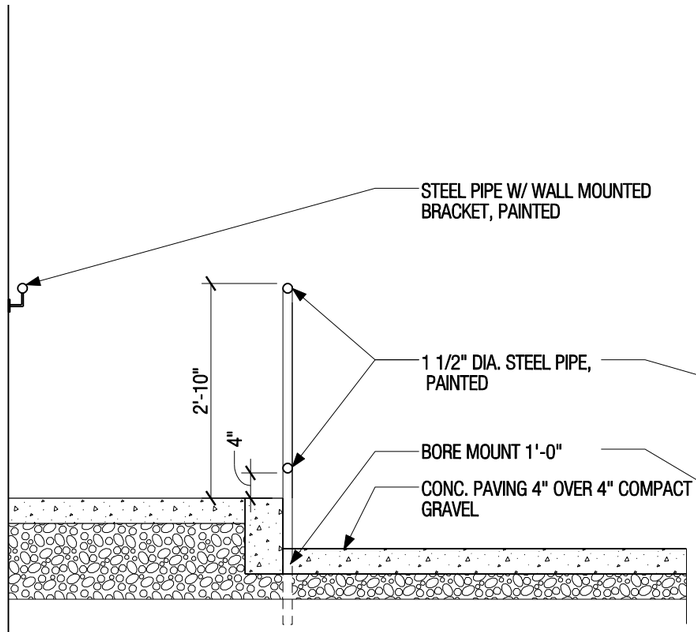

2 RAILING SECTION

1/2"=1'-0"

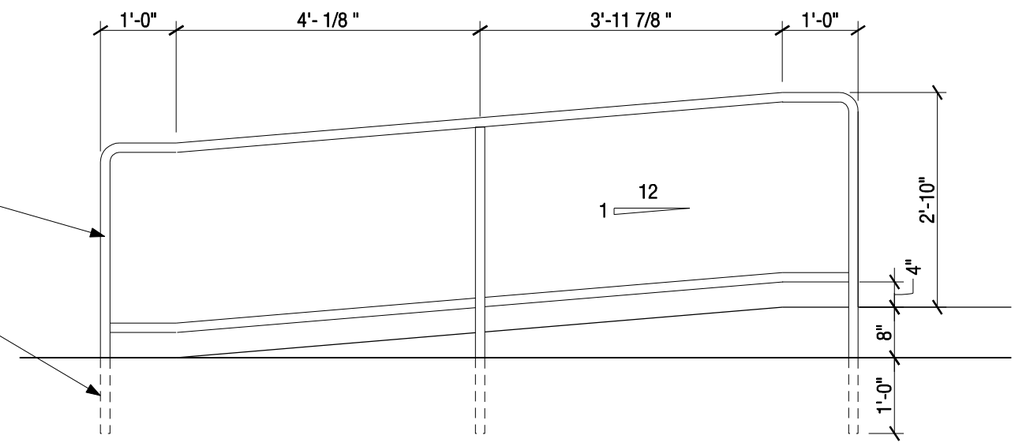

1 RAILING ELEVATION

1/2"=1'-0"

SHERWIN WILLIAM COLOR
SW-7069 SPICY HUE
OR COLOR TO MATCH

EXTERIOR LATEX EGG SHELL

RAILING DETAILS

TIM LAI ARCHITECT 400 W RICH STREET, COLUMBUS, OH 43215 T 614 321 5128 E INFO@LAIARCHITECT.COM